H.Back
B.Baldin
S.Pordes
26-Apr-2011
Updated

Conceptual design of the Interlock device for the Cryogenic Distillation Column

Preliminary

1. Introduction

The Cryogenic Distillation Column at the PAB includes two 600 watt cryocoolers and three 600 watt heaters. The cryocoolers and heaters are used to maintain desired low temperature in the column. The cryocoolers always run at full power and at present are operated manually, and the resistive heaters are controlled by the closed control loop consisting of one or two Agilent power supplies operated by the LakeShore Model 336 Temperature controller. The Temperature controllers are interfaced with the National Instrument cRIO-9073 PLC via GPIB interface. It is assumed that the PLC does not interfere with the Temperature controller closed loop functions and alarm settings. The purpose of the Interlock device for the Cryogenic Column (ICC) is to prevent various undesirable conditions when either cryocoolers or heaters are not operating normally.

2. Proposed Interlock features

The Interlock device for the Cryogenic Column (ICC) will use the following status information from the cryocooler System I/O port:

a. NO ERROR (contacts 7 and 8 are closed)

b. COMPRESSOR ON (contacts 1 and 2 are closed)

c. HELIUM TEMPERATURE ERROR (contacts 5 and 6 are closed)

d. HELIUM PRESSURE ERROR (contacts 3 and 4 are closed)

The Interlock device for the Cryogenic Column (ICC) will use the following status information from the LakeShore 336 controller detachable terminal block:

a. Relay 1 N.O. contacts associated with the TEMPERATURE HIGH alarm

b. Relay 2 N.O. contacts associated with the TEMPERATURE LOW alarm

The Interlock device for the Cryogenic Column (ICC) will use the following status information from the Agilent N5700 power supply J1 Analog Programming Connector:

a. POWER SUPPLY OK (pins 2,3 and 16)

The ICC will have the following control features implemented:

a. Remote start of the compressor via System I/O port using contacts 10 and 15

b. Remote stop of the compressor via System I/O port using contacts 10 and 14

c. Emergency stop of the cryocooler via System I/O port using contacts 10 and 13

d. Emergency disable of the heater power supply output via J1 Analog Programming Connector using pins 1 and 14

3. Interlock implementation

The ICC will be implemented as a 19” rack chassis. All necessary connectors to cryocoolers, power supplies and controllers will be located on the rear panel of the chassis. Also a DC Power socket to provide power to the ICC will be located on the rear panel. The front panel will have a LCD display to indicate the status of the Interlock and the following controls and indicators:

a. ACTIVATE INTERLOCK button

b. DISABLE INTERLOCK button

c. EMERGENCY STOP button

d. COMPRESSOR 1 START button

e. COMPRESSOR 1 STOP button

f. COMPRESSOR 2 START button

g. COMPRESSOR 2 STOP button

h. POWER ON LED (Green)

i. INTERLOCK ACTIVE LED (Green)

j. INTERLOCK DISABLED LED (Yellow)

k. CRYOCOOLER ERROR LED (Red)

l. COMPRESSOR 1 ON LED (Green)

m. COMPRESSOR 2 ON LED (Green)

Preliminary

The Interlock logic will be implemented using TI MSP430 microcontroller. After power up, the Interlock will default to the “INTERLOCK DISABLED” mode allowing manual operations of the equipment. The status of the system will be monitored continuously, but any fault condition will not cause a shutdown of the compressors and heaters. When “INTERLOCK ACTIVE” mode is activated, the ICC will monitor status of the cryocoolers, power supplies and controllers. If any of the status outputs change to fail (open or closed relay contact listed above), the Interlock will shut off the heater power supplies and stop the compressors. The ICC will stay in this status until the DISABLE INTERLOCK button is pressed. The ICC will provide the following status information to the external device (e.g. PLC):

a. INTERLOCK ACTIVE (CMOS/LVTTL logic 1, otherwise 0)

b. CRYOCOOLER ERROR (CMOS/LVTTL logic 1, otherwise 0)

c. HEATER ERROR (CMOS/LVTTL logic 1, otherwise 0)

d. TEMPERATRUE HIGH (CMOS/LVTTL logic 1, otherwise 0)

e. TEMPERATURE LOW (CMOS/LVTTL logic 1, otherwise 0)

The ICC will accept the following control signals from the external device (e.g. PLC):

a. SYSTEM SHUTDOWN (CMOS/LVTTL logic 1, otherwise 0)

4. System wiring

In order to facilitate control and monitoring functions of the Interlock, additional wiring and re-wiring of the system is required. Figure 1 below shows additional cables in black and existing wiring in blue. Additional number of wires required is shown on each connection.

Preliminary

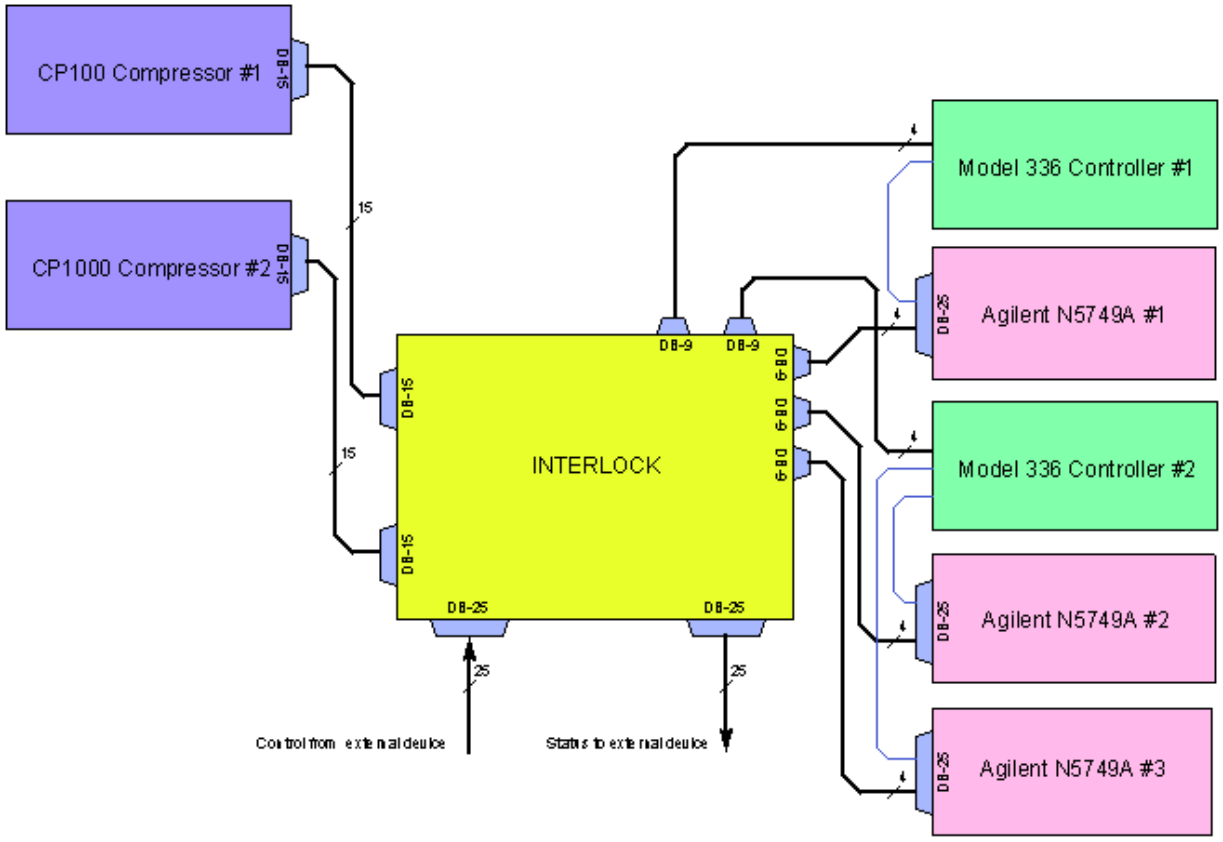

Figure 1: Additional system wiring for the Interlock implementation

Prelim