Interlock device for the Cryogenic Distillation Column (ICC)

B.Baldin

PPD, EED Fermilab

Requirements for the ICC

- Continuously monitor status of cryocoolers and heaters
- Disable both cryocoolers and heaters when any of the fault conditions are discovered
- Allow manual activation and deactivation of the Interlock
- Provide visual indication of the system status
- Facilitate remote manual control of the cryocoolers
- Provide ICC status information to the external device

Status information used by the ICC

From the cryocooler System I/O port:

a. NO ERROR (contacts 7 and 8 are closed)
b. COMPRESSOR ON (contacts 1 and 2 are closed)
c. HELIUM TEMPERATURE ERROR (contacts 5 and 6 are closed)
d. HELIUM PRESSURE ERROR (contacts 3 and 4 are closed)

From the model 336 controller detachable terminal block:

a. Relay 1 N.O. contacts associated with the TEMPERATURE HIGH alarm
b. Relay 2 N.O. contacts associated with the TEMPERATURE LOW alarm

From the Agilent N5700 power supply J1 Analog Programming Connector:

a. POWER SUPPLY OK TTL signal (pins 2,3 and 16)

Control features of the ICC

- Remote start of the compressor via System I/O port using contacts 10 and 15
- Remote stop of the compressor via System I/O port using contacts 10 and 14
- Emergency stop of the cryocooler via System I/O port using pins 10 and 13 (closed contacts)
- Emergency disable heater power supply output via J1 Analog Programming Connector using pins 1 and 14 (open contacts)

Interlock logic

The Interlock logic will be implemented using TI MSP430 microcontroller. After power up, the Interlock will default to the “INTERLOCK DISABLED” mode allowing manual operations of the equipment. When “INTERLOCK ACTIVE” mode is activated, the ICC will monitor status of the cryocoolers, power supplies and controllers. If any of the status outputs change to fail (open or closed relay contact listed above), the Interlock will shut off the heater power supplies and stop the compressors. The ICC *will stay in this status* until the DISABLE INTERLOCK button is pressed.

Interlock implementation

- Enclosure - 3.5“H X 17“W X 8“L 19” rack chassis
- All status/control connectors located on the rear panel
- +5V DC Power socket on the rear panel
- An LCD display to indicate the status of the Interlock and control buttons on the front panel

Controls and LED indicators

- ACTIVATE INTERLOCK button
- DISABLE INTERLOCK button
- EMERGENCY STOP button
- COMPRESSOR 1 START button
- COMPRESSOR 1 STOP button
- COMPRESSOR 2 START button
- COMPRESSOR 2 STOP button
- POWER ON LED (Green)
- INTERLOCK ACTIVE LED (Green)
- INTERLOCK DISABLED LED (Yellow)
- SYSTEM ERROR LED (Red)
- COMPRESSOR 1 ON LED (Green)
- COMPRESSOR 2 ON LED (Green)

LCD display

A Parallax 27979 4rows x 20characters LCD display will be used to indicate ICC status and type of errors:

Four lines of text will are used as the following:

1. Interlock ON (OFF)
2. Compressor error type
3. Controller error type
4. Power supply error

Status for the external device

- INTERLOCK ACTIVE (CMOS/LVTTL logic 1, otherwise 0)
- CRYOCOOLER ERROR (CMOS/LVTTL logic 1, otherwise 0)
- HEATER ERROR (CMOS/LVTTL logic 1, otherwise 0)
- TEMPERATURE HIGH (CMOS/LVTTL logic 1, otherwise 0)
- TEMPERATURE LOW (CMOS/LVTTL logic 1, otherwise 0)
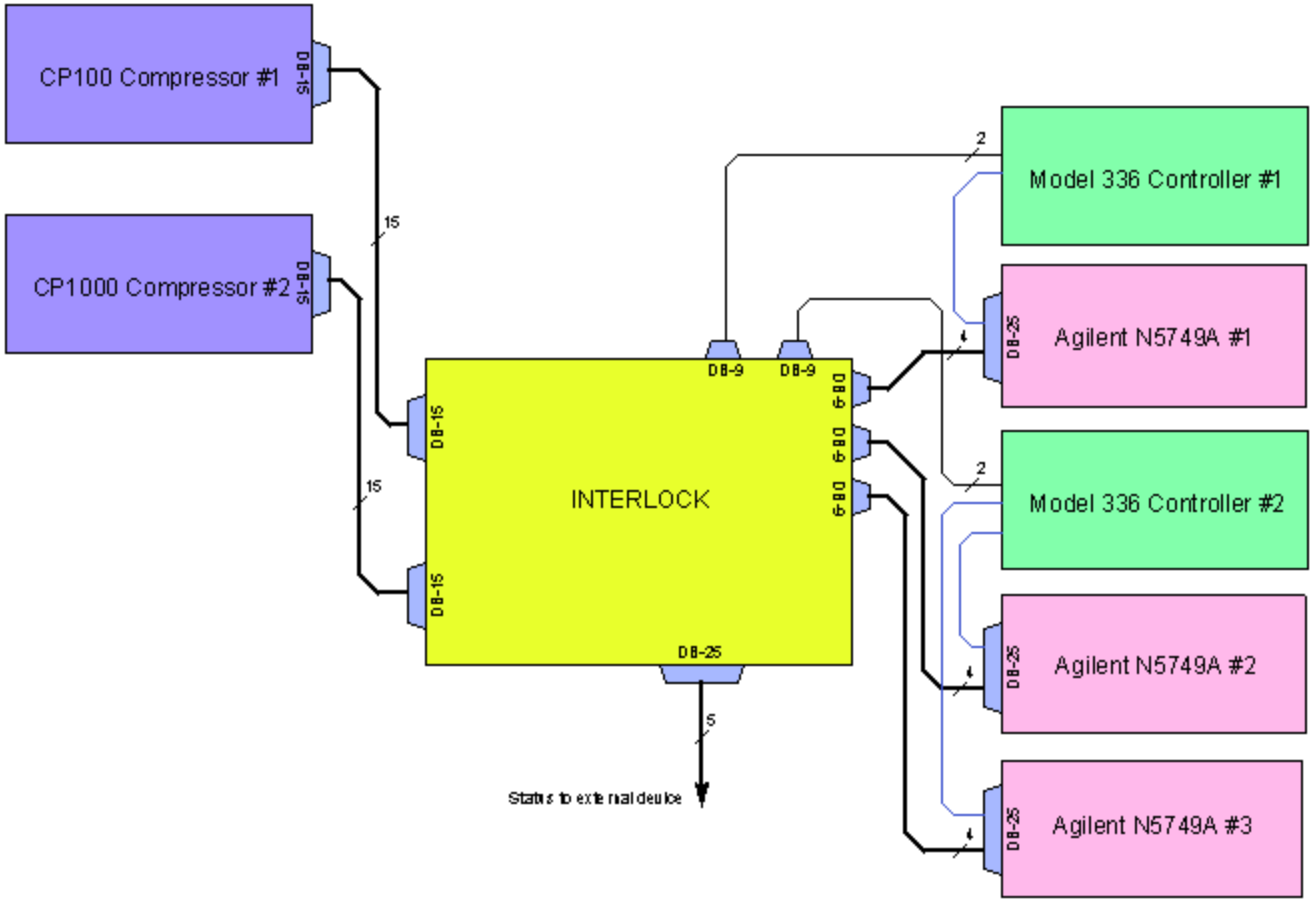
Status and Control connections