B.Baldin
S.Davini
A.Razeto
09-Oct-2013
Updated

DS-50 Global Trigger integration

1. Assumptions

Several hardware and software items are required for implementation of the Global trigger mode in DS-50 experimental setup. The following are preliminary requirements necessary to provide this functionality:

- One V1495 module (Main) in the clean room and two V1495 modules (Veto and Fanout) in the control room
- Main V1495 and Veto V1495 modules are connected via optical- electrical converters and optical fibers (Figure 1)
- Fanout V1495 module connected to the Veto V1495 module via 34 conductor wide flat cable and coaxial cable
- TTL 1PPS signals available to both Main and Veto V1495 modules
- Veto DAQ system will generate GPS synchronized time stamps and read them out with each Veto DAQ event
- Veto DAQ system will accept 16-bit LVDS Trigger ID signals and TTL Run Enable, 1PPS, clock and trigger signals
- Veto DAQ system will generate TTL Global Memory Full and Global DAQ Error signals indicating status of the system
- Veto DAQ system will store 16-bit trigger ID number and embed it in each Veto DAQ event
- Veto DAQ system will use Run Enable signal for marking beginning of the run
- TPC DAQ software capable of reading event data from both VME crates located in clean room and control room
- Veto and/or TPC DAQ software capable of controlling Veto V1495 via VME V2718 controller in the Local mode

2. Connections between Main and Veto V1495s

A simplified block diagram shown in Figure 1 presents minimum number of connections between Veto and Main V1495 modules needed for Global trigger integration. Connections between clean room and control room require use of the optical links. Each optical link consists of 1/6 of V720 module, optical fiber and 1/6 of V730 module. The total number of optical links is seven.

3. Modes of operation

The Veto V1495 module can be used in two modes: Local mode and Global mode. In the Local mode module will generate Trigger ID based on four types of local triggers. The module can only be controlled via V2718 VME controller plugged in the crate. In the Global mode the module will decode serially encoded triggers sent by the Main V1495 module and transmit them to the Veto DAQ system in the same way as in the Local mode.

The Main V1495 module has two modes of processing Veto triggers: TPC only mode and Pass through mode. In the TPC only mode Veto triggers are sent to the Veto DAQ only during acquisition window generated by the Main V1495. In this case the trigger number is the same for all Veto triggers, but trigger type corresponds to a specific Veto trigger (CW or SC). No triggers are sent to the Veto DAQ outside of the V1495's acquisition window, even if the TPC DAQ system is not busy. In the Pass through mode Veto triggers are also sent to the Veto DAQ when the TPC DAQ is not busy processing current trigger. These triggers will have different trigger type and will be read out by the TPC DAQ as well.

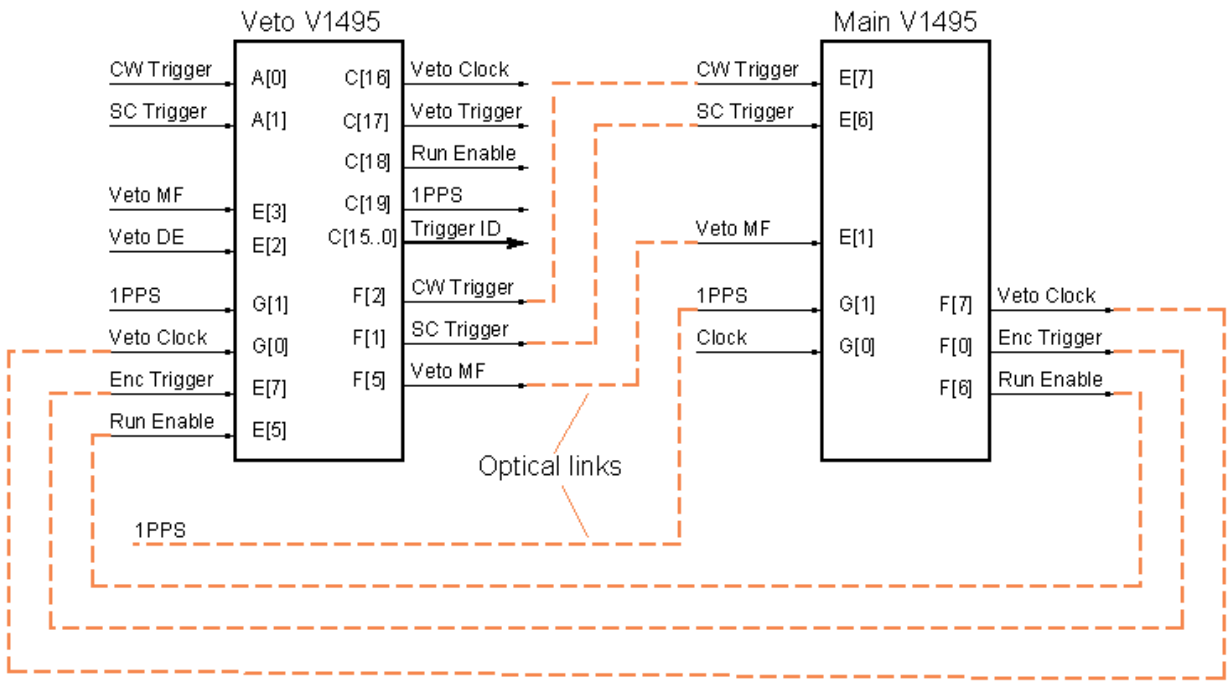

Figure 1. Basic connections between Main and Veto V1495s.

4. Connections between Veto and Fanout V1495s

The Veto DAQ system consists of four NI crates and requires four sets of timing and control signals (one per crate). A second V1495 module called Fanout V1495 is used for this purpose. It receives LVDS signals from the Veto V1495 module and transmits them via ports C, D, E and F to the Veto DAQ system. Trigger ID signals at ports D and E have LVDS signal levels. Four other signals at ports E and F have TTL signal levels. The Veto DAQ system generates Memory Full (MF) and DAQ Error (DE) TTL signals in each crate's NI 6583 module. Global Veto MF and global Veto DE signals are connected to the port E of the Veto V1495 module. A block-diagram of the connections is shown in Figure 2.

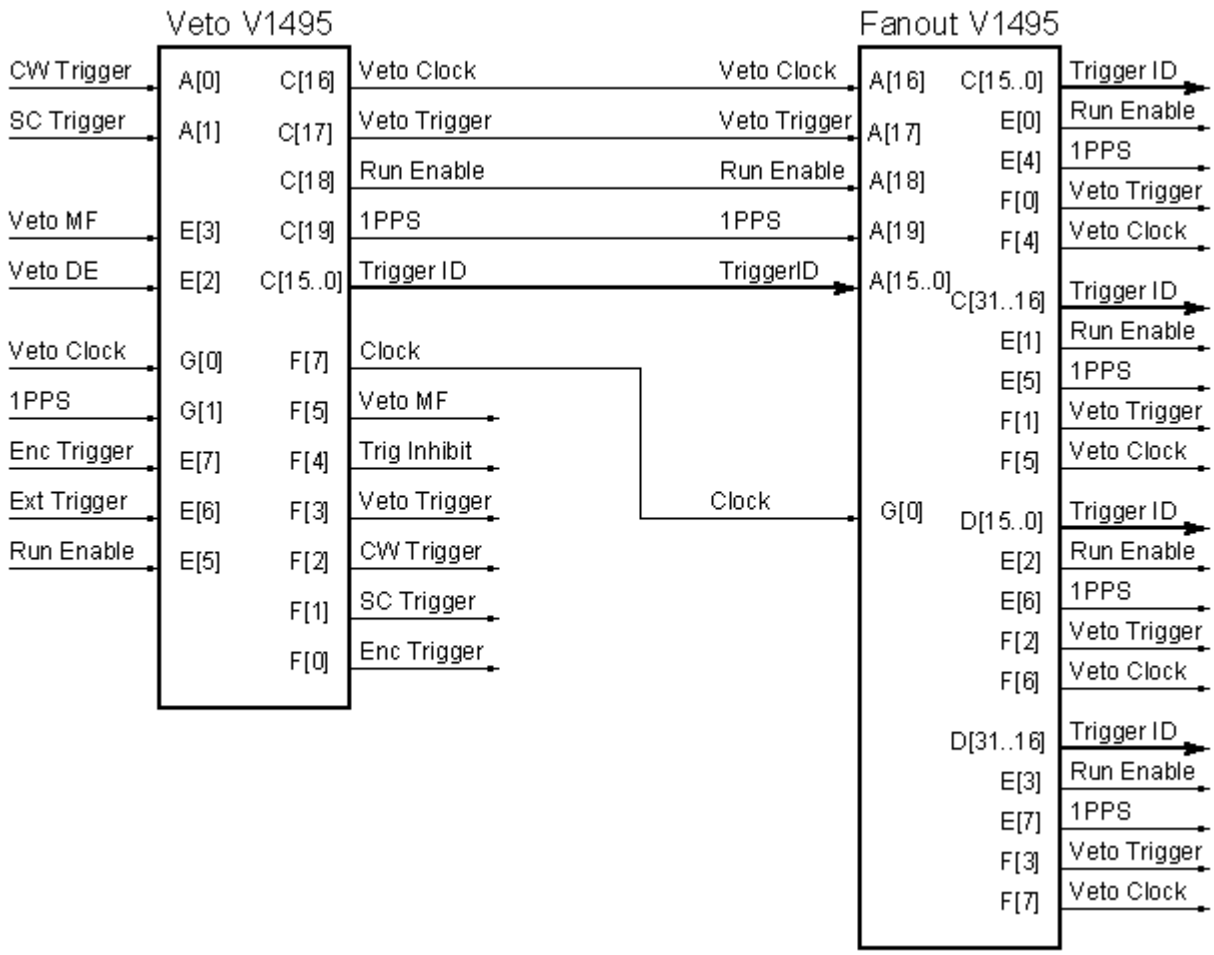

Figure 2. Basic connections between Veto and Fanout V1495s.

Veto MF and Veto DE signals shown in Figure 2 are global signals derived from four Veto NI crates. These signals are generated by ORing individual crate signals in the "chained OR" scheme shown in Figure 3. Each NI 6583 module has an OR circuit which combines internal Memory Full or DAQ Error signal with the corresponding input signal from another crate. This scheme allows using only two coaxial cables instead of eight.

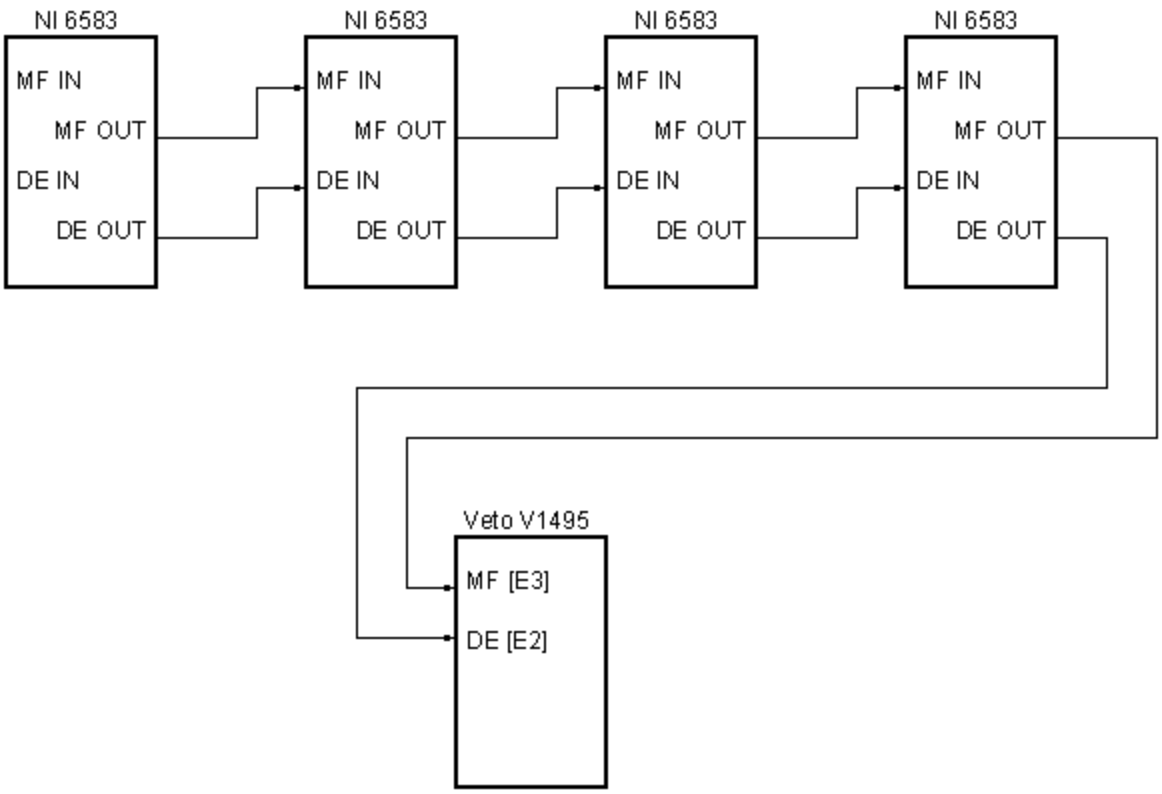

Figure 3. Chained OR scheme.

5. Fanout V1495 in the Local mode

It is possible to run Veto DAQ system using only Fanout V1495 module. In this case the Fanout V1495 module has to run in the Local mode. The module defaults to this mode on power up or after VME reset. No software access is necessary, if there is no need to control Run Enable signal. The module will accept two Veto hardware triggers on Port B and increment Trigger number with each trigger. A block-diagram of the connections is shown in Figure 4.

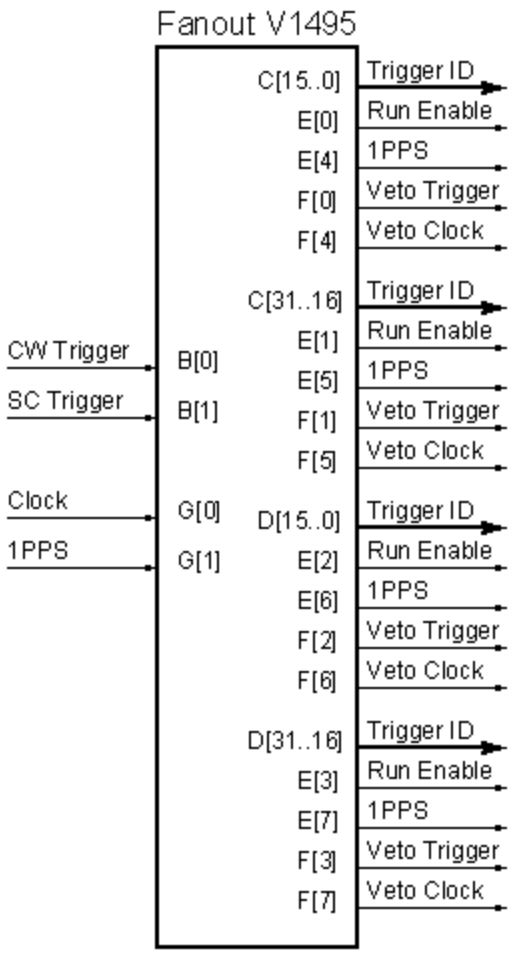

Figure 4. Fanout V1495 in Local mode.