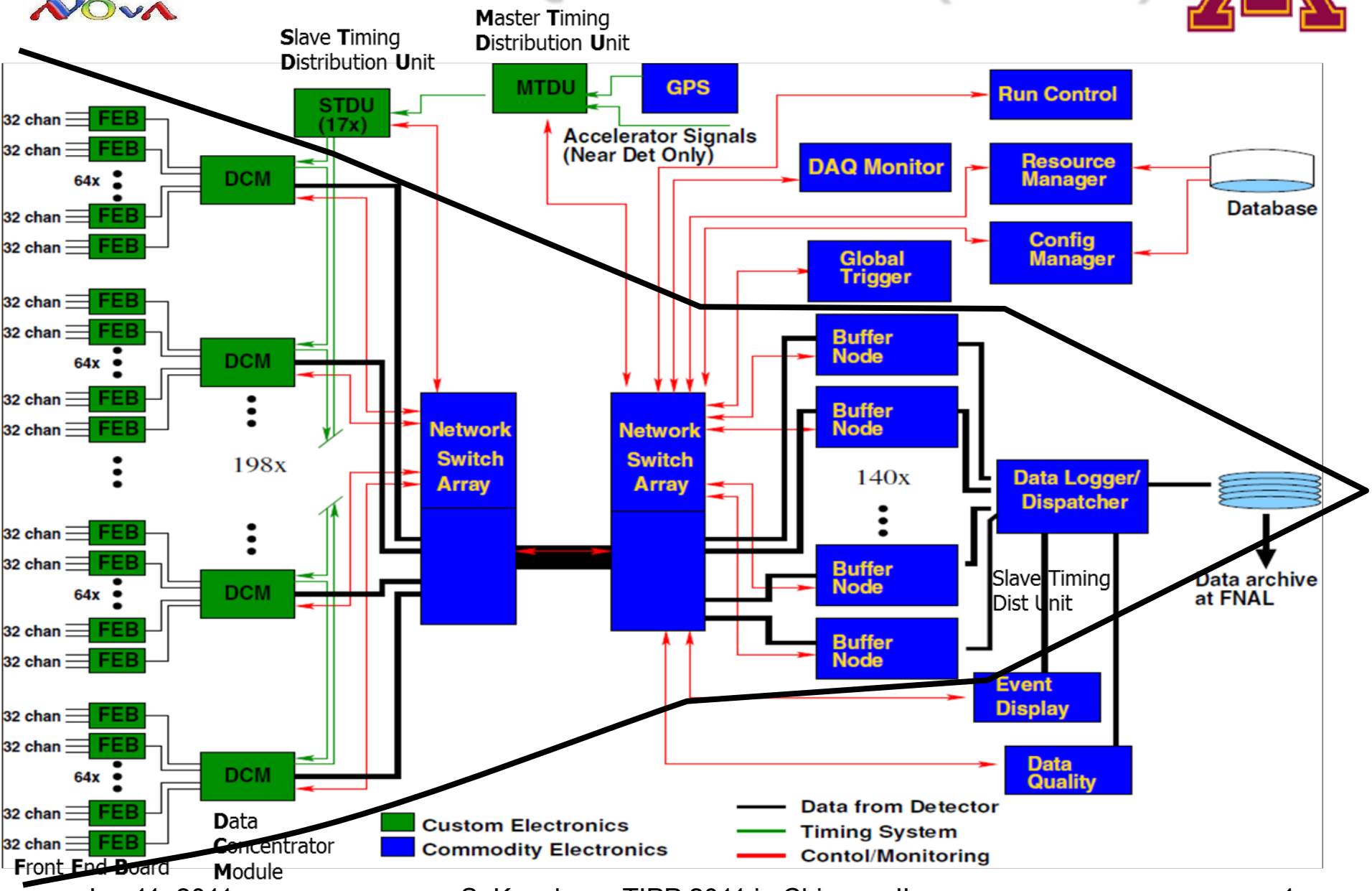NOνA DAQ–Data Flow (L to R)