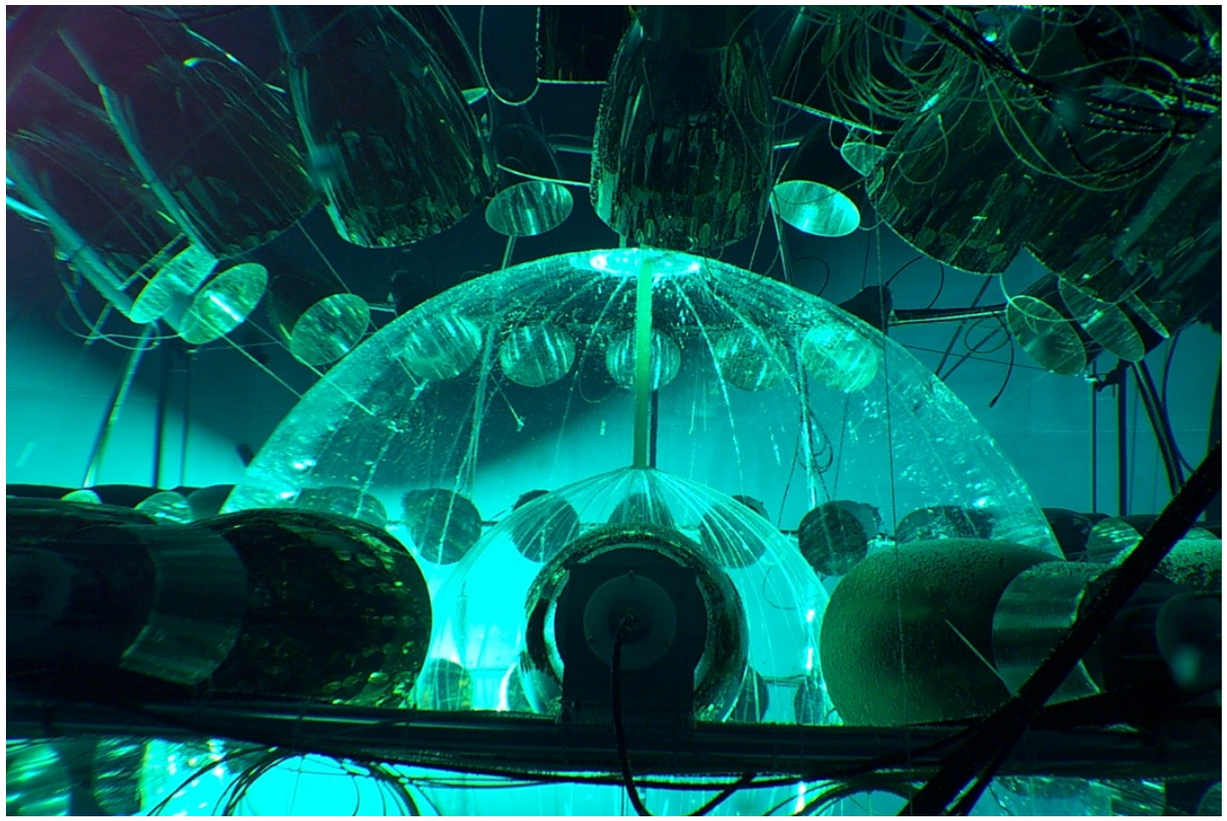

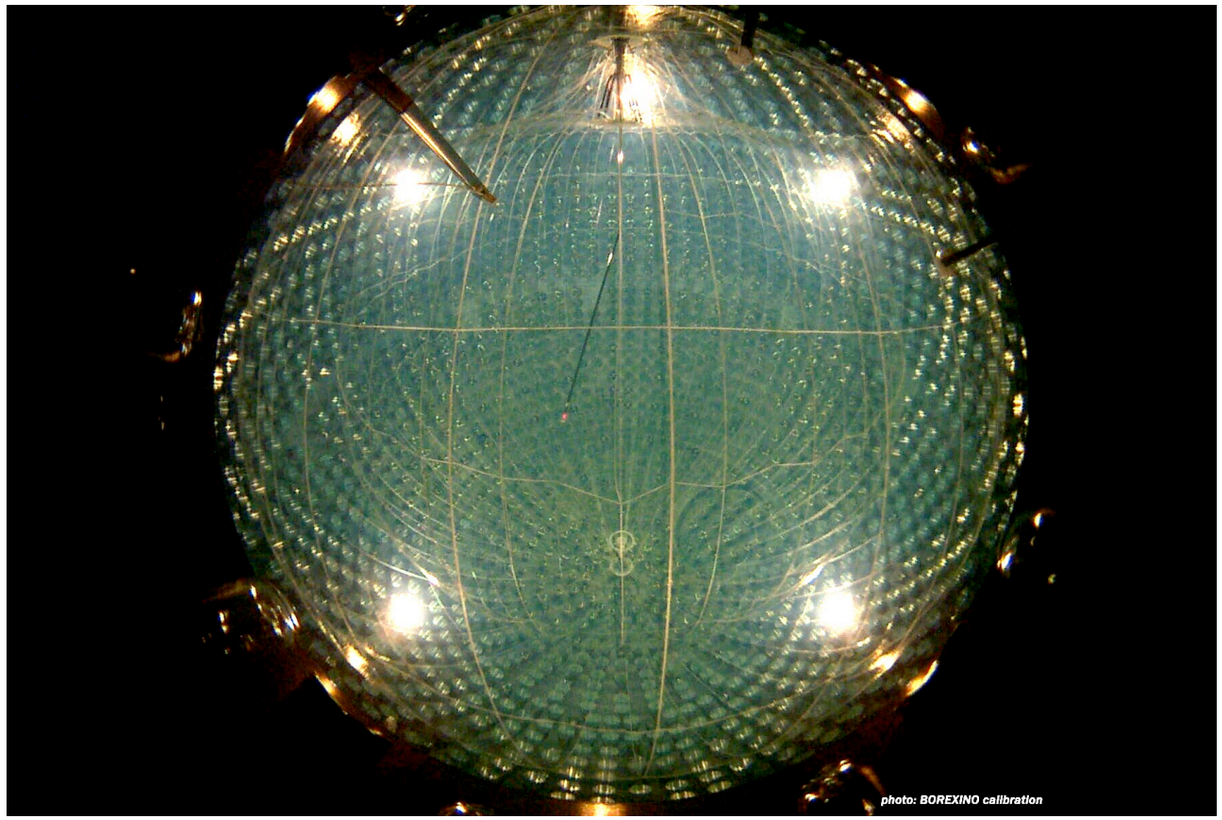

Electronics for Dark Side and Borexino (muon, neutron veto and possibly argon)

Beijing, Feb. 14th, 2011

M. Pallavicini
INFN & University of Genova - Italy

Talk outline

- Description and operation of **CTF** (see G. Ranucci's talk for details)
- Physics requirements for scintillator, water and argon detectors
- **Electronics:** Preliminary work already done
  - **Digitizers**
    - Some R&D done for Borexino
    - Possible options: CAEN, NI, Agilent
  - **Front End**
    - Prototype activity started in Genova
    - Goal: a unique design for Borexino and Dark Side, at least for scintillator and water signals
  - **Trigger and DAQ architecture**
- **Financial status**
  - Not too bad

CTF: Counting Test Facility

- **CTF** is the **Borexino prototype,** developed in the years 1993-1996 to prove the feasibility of Borexino (G. Ranucci's talk)
  - **11 m** tall, **10 m** diameter **"blue tank"**
  - 4 m^3 of scintillator contained in a floating nylon vessel
  - 100 pmts for scintillation light detection
  - ~ 15 muon veto pmts
  - old standard NIM + CAMAC electronics + VMS VAX DAQ !

- It is now a still crucial device for:
  - **Scintillator purity tests:** it is interconnected to Borexino plants and any liquid for Borexino is tested in CTF
  - Low radio-activity R&D activity
    - Geo-neutrino related measurements
    - Test of radio-active sources
    - Development of Nd loaded scintillator

CTF: Pictures

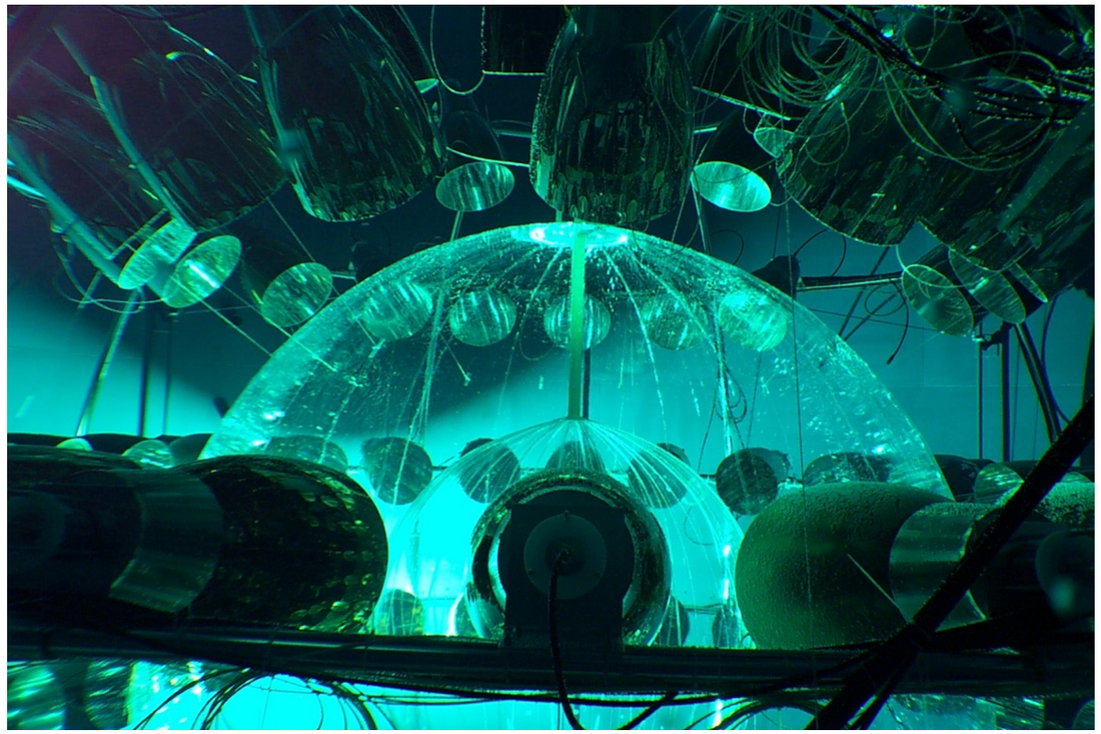

Definition of signals

- In Dark Side experiment we must collect signals from three different detectors:

  - **ARGON** TPC signal: scintillation light from liquid argon and electron discharge in gas
    - Two pulses (usually called S_1 and S_2), very different in amplitude
    - S_2 can be delayed by hundreds of μs or more with respect to S_1

  - **SCINTILLATOR** signal: the **scintillation pulse** in liquid scintillator of the neutron veto; this signal is basically identical to the one we have in Borexino or CTF

  - **WATER** signal: the **Cerenkov light pulse** produced by muons crossing the water;

Physics requirements

- **Scintillator signal**
  - **~ 500 p.e. / MeV** in Borexino, distributed in **< 1 μs;**
  - **Occupancy** of each PMT at 0.1 MeV is **0.025,** requiring very good **single p.e. detection** capability;
  - Event position reconstruction with ~ 15 cm error if **relative time** is known within **0.5 ns** or better
  - The **pulse shape** allows α/β discrimination
  - Huge signal (**x 10⁵**) from μ with following **neutrons** (~256 μs) and **cosmogenics;**
    - **requires zero dead-time** capability and **fast recovery of Front End amplifiers**

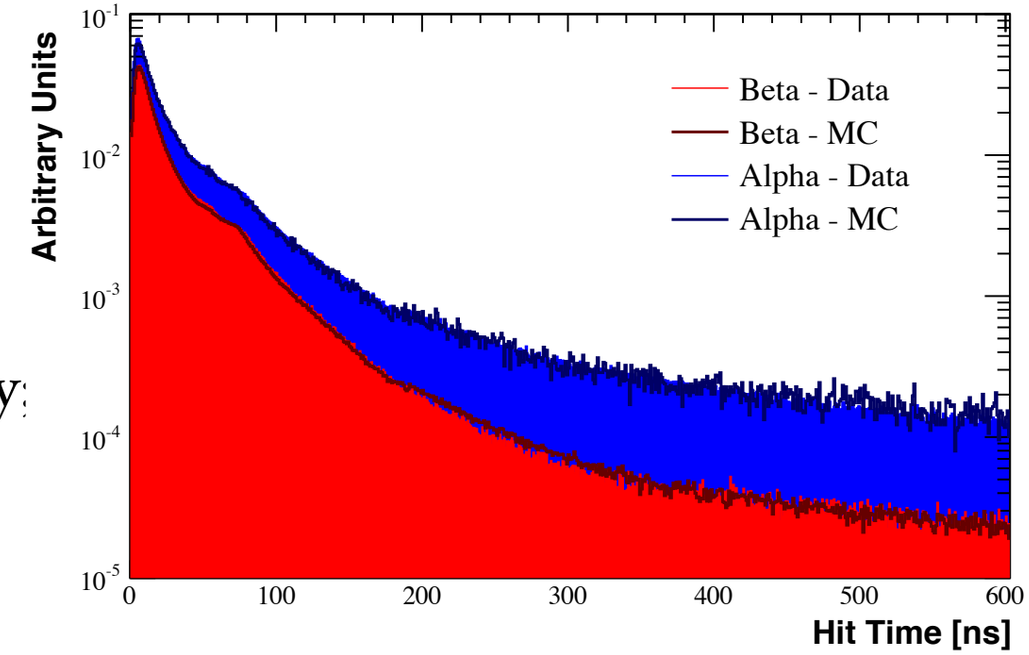

- **Argon: scintillator signals in the two phases**
  - S1: same as scintillator, but time constant several μs (PMT/QPIDs dark noise crucial!)
    - It is important to push as low as possible in energy threshold. Single p.e. capability again.
  - S2: delayed by several ms, much bigger, much faster

- **Water: Cerenkov signal**
  - Same as above, except that light signal can be concentrated a in few channels
    - Trigger on high charge single PMT events ?

Signals

- In all cases you need to:
  - Measure PMT pulses over a large dynamic range
    - From single photoelectron up to 1000 p.e. in Argon S_2, 100 in scintillator or water
  - Measure the relative time among hit pulses
    - sub-ns time resolution, at least in scintillator and water; less demanding in Argon
  - Measure the charge of each pulse with high precision both in single p.e. regime and with large pulses
  - Be robust to very large pulses (muons crossing scintillator or argon)
- All this possible with suitable FADC digitizers with the right number of bits, sampling speed and bandwidth

Example: muon reco in Borexino

- Entry and Exit point in the SSS are found by looking at the space-time distribution of hits
- Complex model fine tuned for Borexino

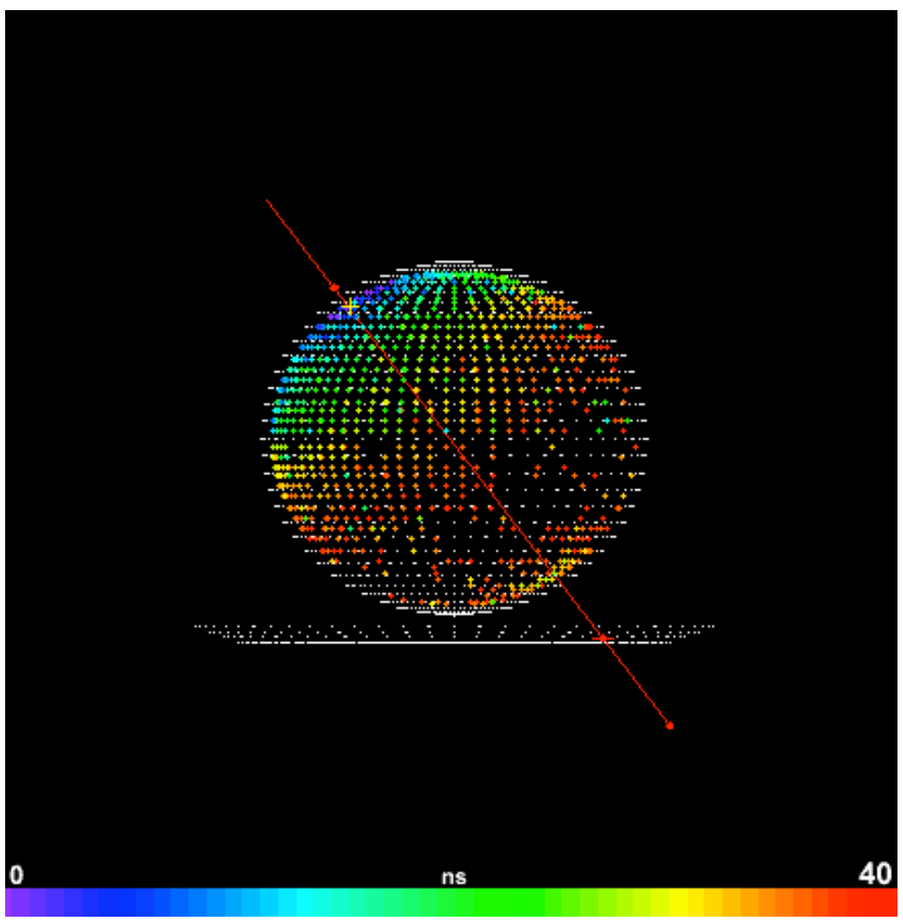

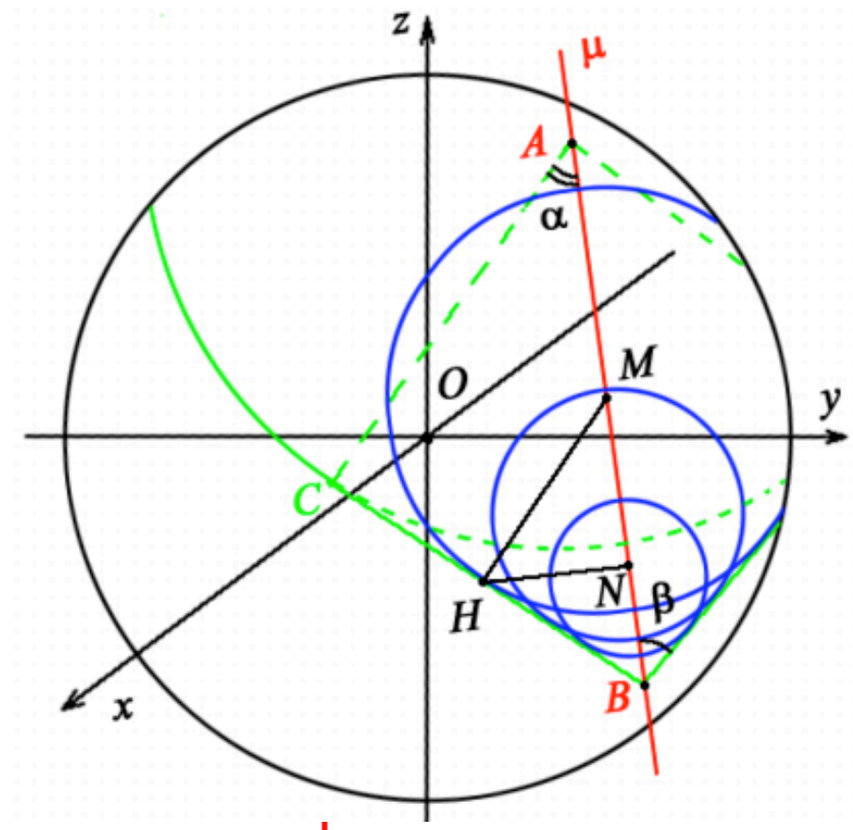

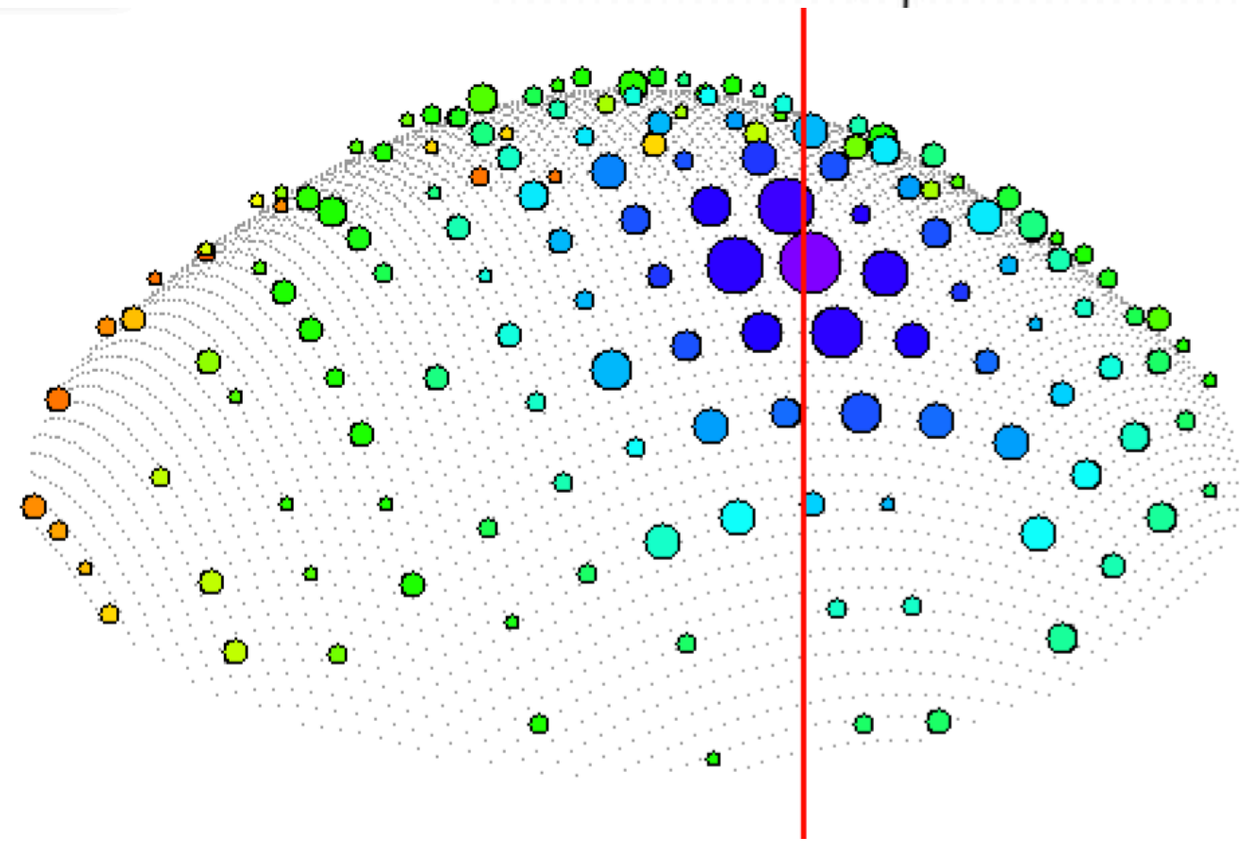

Muon detection in Borexino

- Muons are identified and rejected by means of both inner and outer detector
  - Muons generate also neutrons and long and short lived cosmogenic nuclei

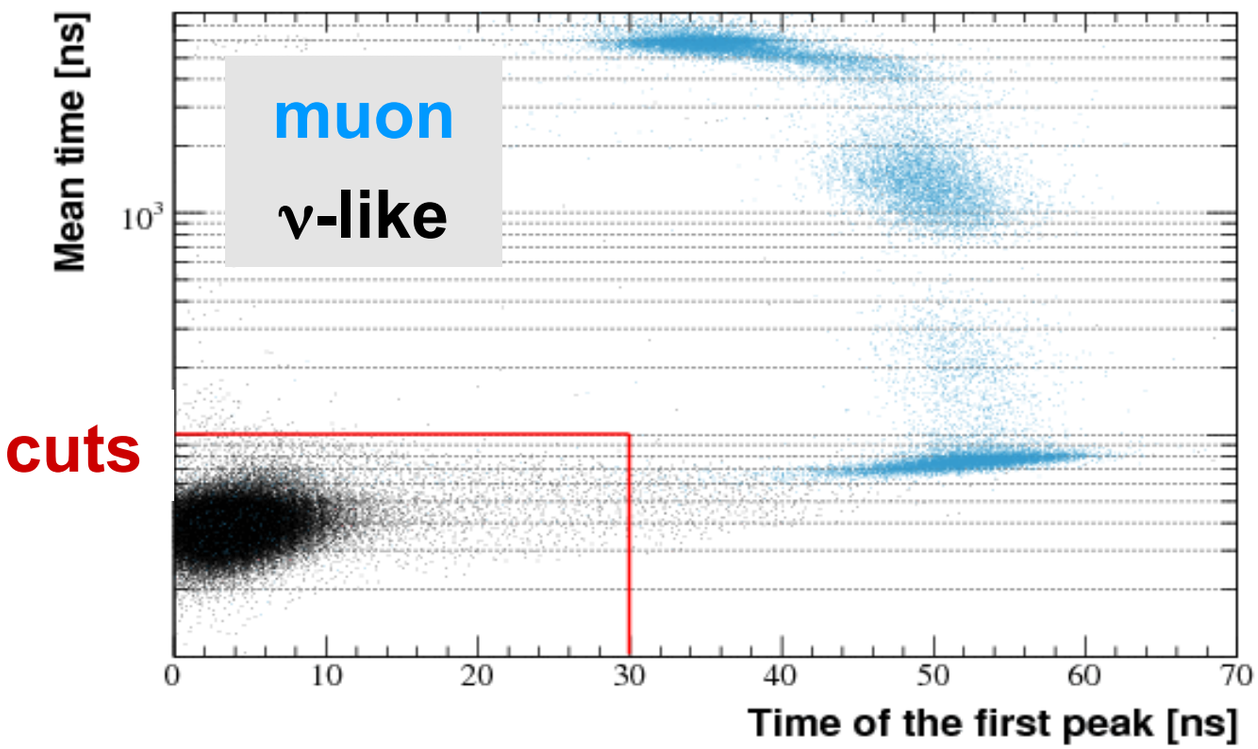

High efficiency in neutron tagging

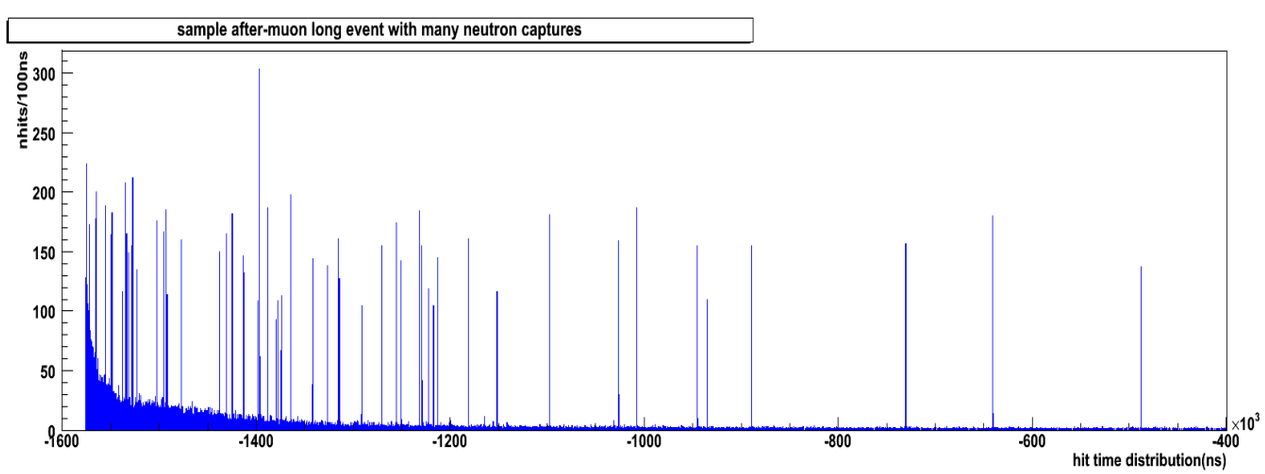

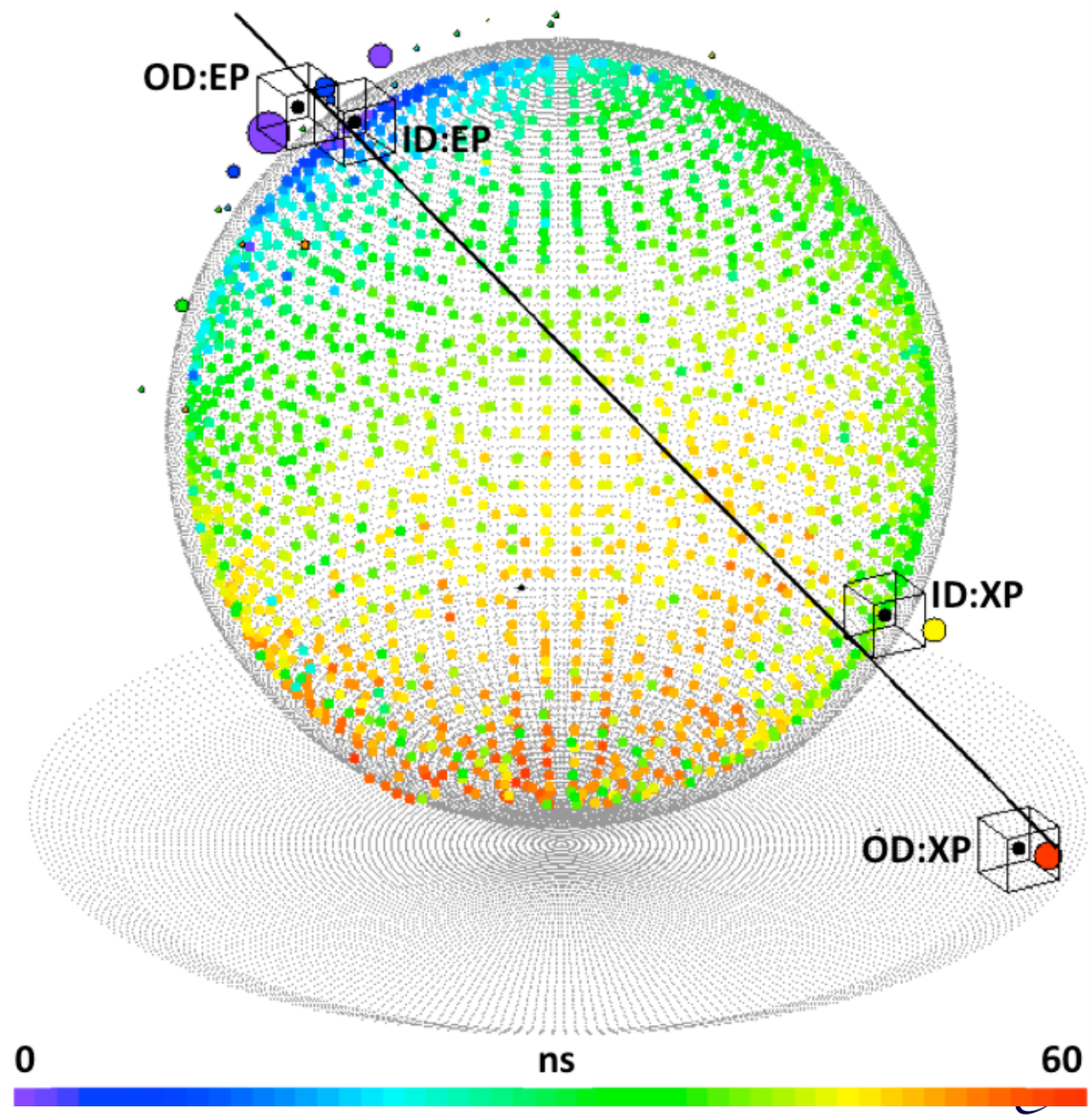

R&D for Borexino

- Existing Flash ADC modules are good candidate for an electronics upgrade in Borexino
  - **1-2 GHz** sampling rate, 8-10-12 bits available
  - Perfect for good time and charge measurement with sub-ns resolution and high dynamic range
  - Borexino requirements:
    - **<0.5 ns** time resolution
    - **0.1-50 p.e.** dynamic range in charge
    - zero dead time
    - **group trigger capability**
  - For Argon
    - Dynamic range larger, large memory depth to be able to trigger on S2 and recover S1
    - Slower signals, sampling speed may be lower with suitable Front End

Options

- We have tested a few boards:
  - **CAEN (e.g. V1731)**
  - **National Instruments (e.g. NI-PXI 5154)**
  - **Agilent Technologies (in progress)**

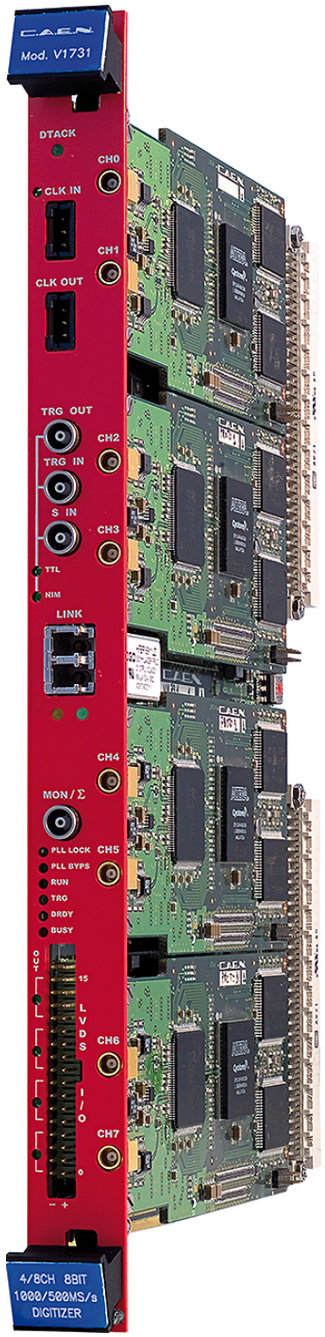

Agilent option

- Very interesting option
  - 12 bits !!
  - 2 Gs/s
  - Very good band-width
  - Good also for QPIDs, should we decide to choose them

Not available yet, coming soon!

Hardware	
Size	1 slot 3U
Resolution	12 bits
Sample rate	2 GS/s
Bandwidth	30 MHz to 1 GHz
Impedance	50 Ω
Coupling	AC

2300 channels option

6x AXIe 14-slot chassis, each with one ESM and 384 input channels.

- This is Borexino layout
- For DS we may need just 1 rack, with which we might read everything: Scintillator, Water Cerenkov and Argon (1 rack = 384 channels)
  - Software trigger architecture strongly simplified
  - In principle: in fact, we must analyze CPU requirements (I did not do it yet) and see what is the best layout
    - It might be smarter to split in more than one rack

Triggering logic (water+scintillator+argon)

- Simpler choice: **pure software trigger**
  - For each hit in a PMT, the board identifies the pulse and make **zero suppression**
  - The board make a 8 bit **TIME_STAMP** available and keep data in memory
  - **The DAQ software read TIME_STAMPs continuously**
  - A trigger occurs when the number of hits in a time window is above threshold
- Numbers
  - ~1KHz dark noise rate x 384 PMTs x 8 bytes --> 3.1 Mb/s
  - Search for time coincidences of hits
    - The hard part: need **good software architecture** to do it efficiently
  - Start full read-out sequence for triggering events
    - For Borexino: 50 Hz x 100 pulses x 100 samples x 2 bytes = 1 Mb/s EASY
    - For DS: Same as above in Scintillator and Water; in Argon, you want to read all data before S2 in order to recover non-triggering S1 pulses
- Some options (i.e. Agilent) supports an hardware trigger
  - Not very appealing to me now, but to be investigated further

Example for triggering logic (sci or water)

Zero suppression

- To be done on board
  - Assuming 100 samples kept in memory, with 1 kHz dark noise rate we need 200 kbytes of memory to keep 1 s --> with 1 Mb RAM per channel we have 5 s depth; OK also for s1-s2 delay
  - Time-stamp at 64 bits, to maintain 0.5 ns precision (at 2 GHz) and avoid circular problems
    - 32 bits might be ok, however

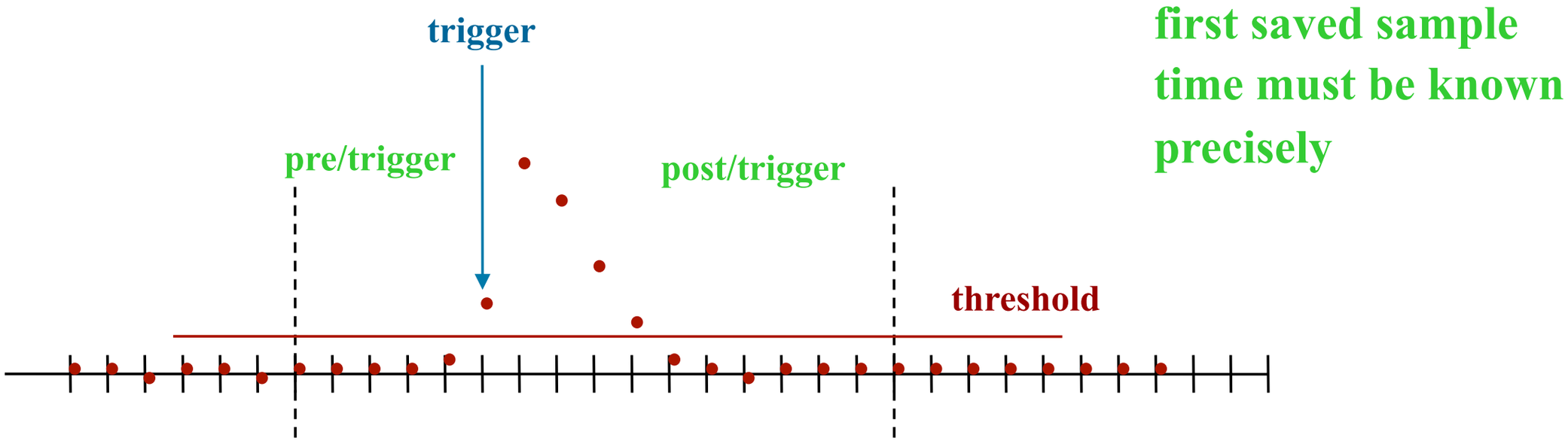

Front End

- Some preliminary prototype done in Genova
  - Gain ~ 40 with ~ 0.8 GHz bandwidth
  - Real prototype after this meeting
- We must work out specs
  - PMT gain
  - Required dynamic range
  - Expected dark noise rate

Front end concept

- Some work already started in Genova (tests and some thinking...)
  - Conceptual drawing:

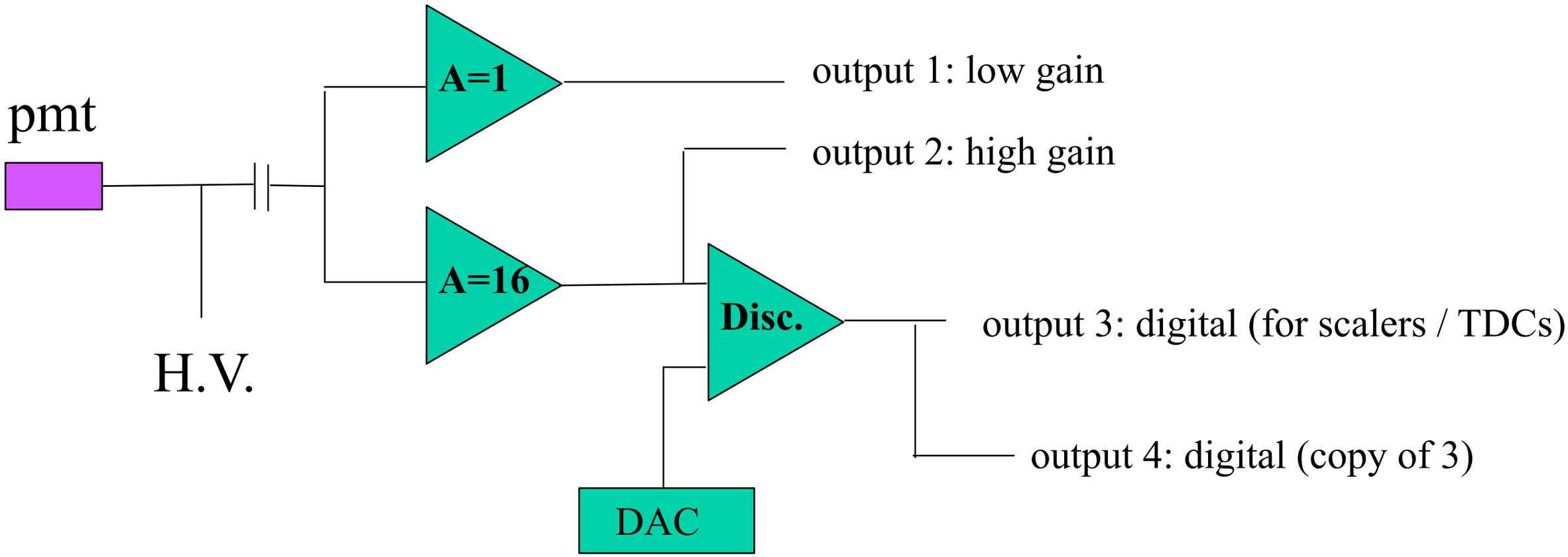

- Goal:
  - Design an amplifier good for Borexino, DS Scintillator, DS Water and DS Argon IF PMTs are chosen.
    - It might be OK for QPIDs as well, but this is to be verified

Work in progress

- A preliminary design, simulated, built and tested (DC coupled)

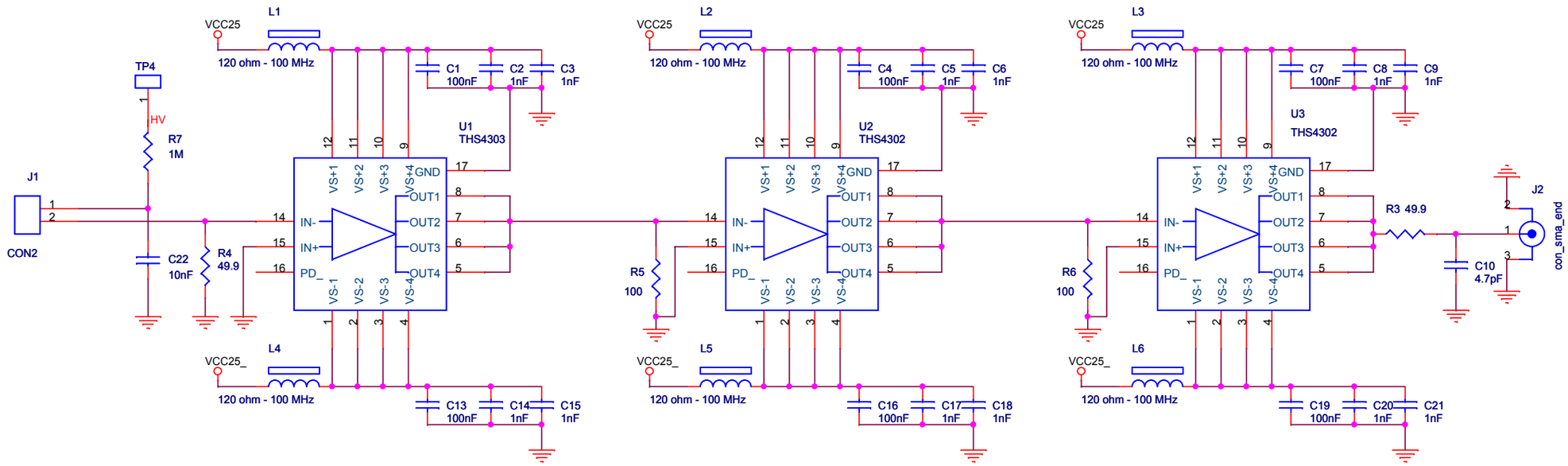

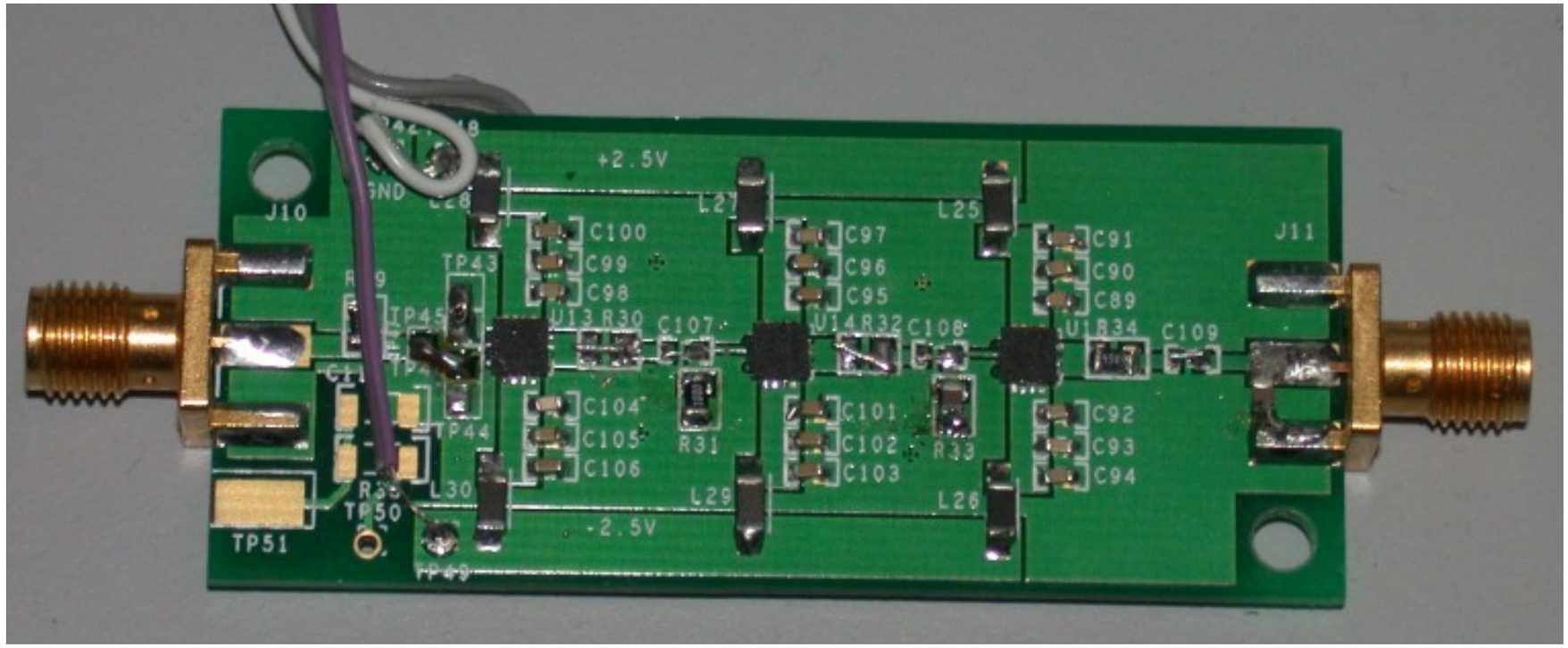

Bandwidth: simulation (DC coupled)

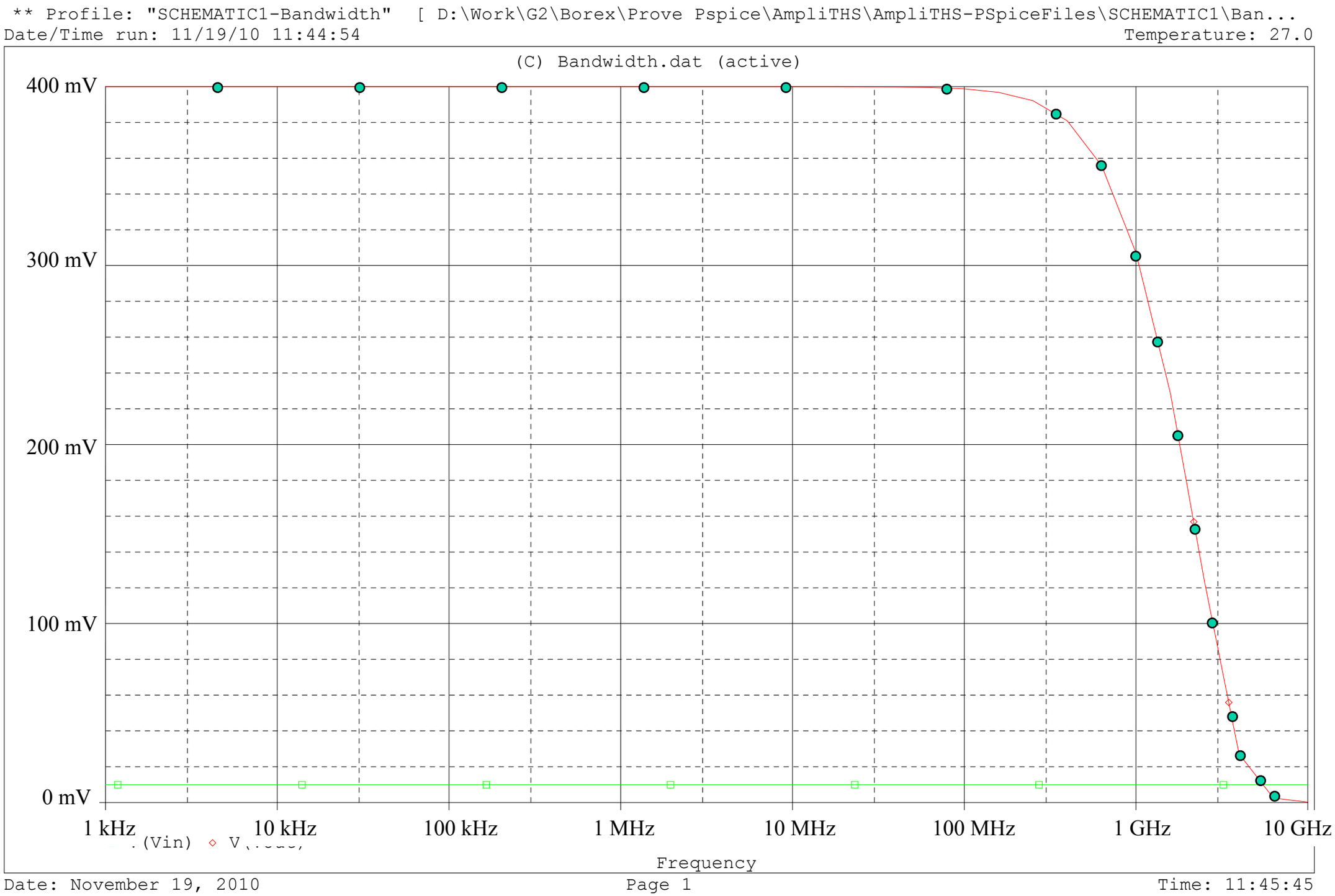

Some preliminary tests

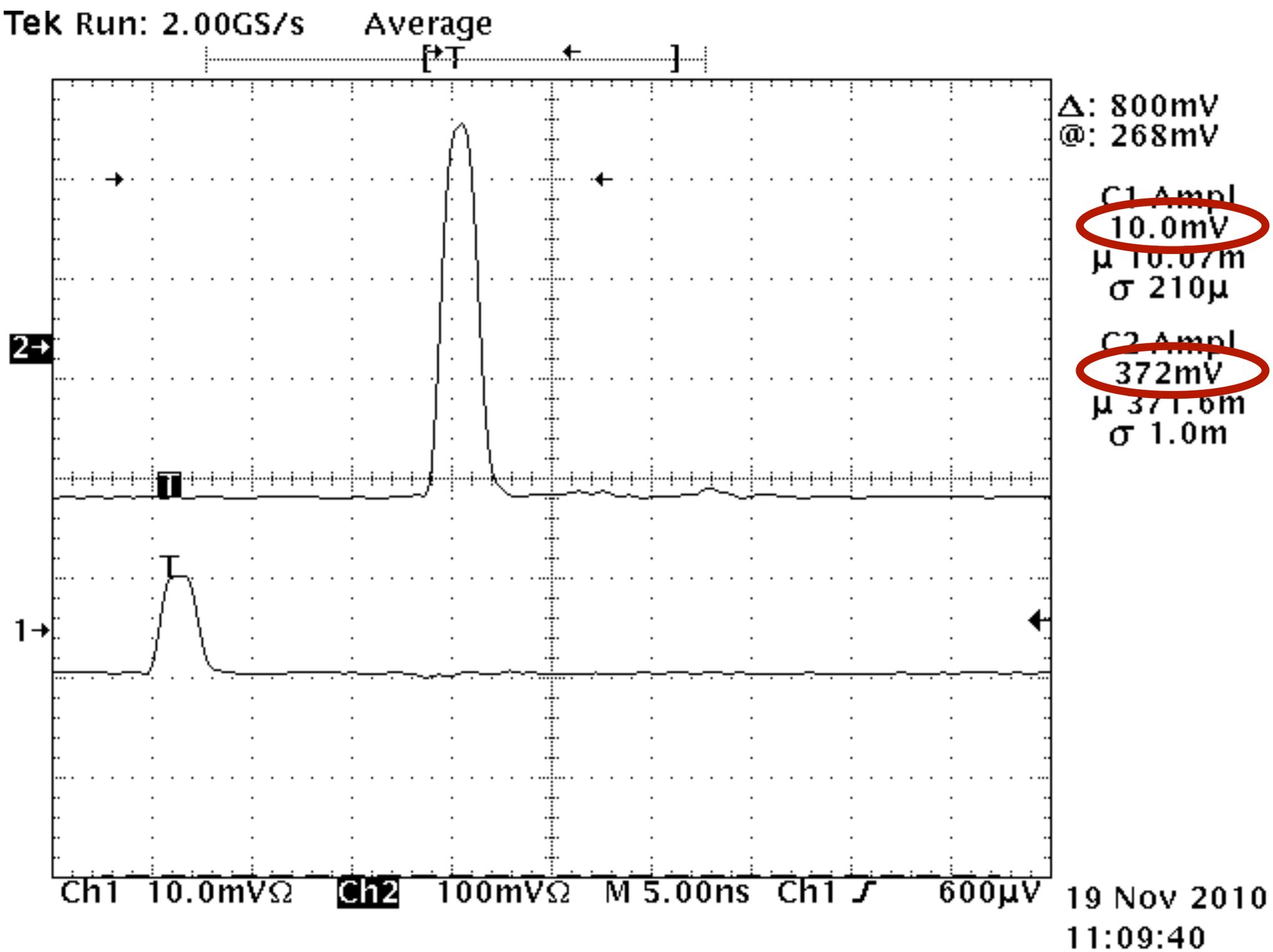

Comments on F. E.

- 800 MHz bandwidth is definitely too much for PMTs signal but the design was done thinking about the possibility of QPIDs
  - It is of course easy to limit the bandwidth
- The double gain is crucial for Argon, but may be useful for Borexino as well
- Digital output important for:
  - scalers (visual!)
  - possible TDCs
- General layout:
  - 12 or 24 channels box with H.V. decoupling, analogue outputs, digital outputs and visual scalers
  - H.V. from external power supply

Front End digital section: block layout

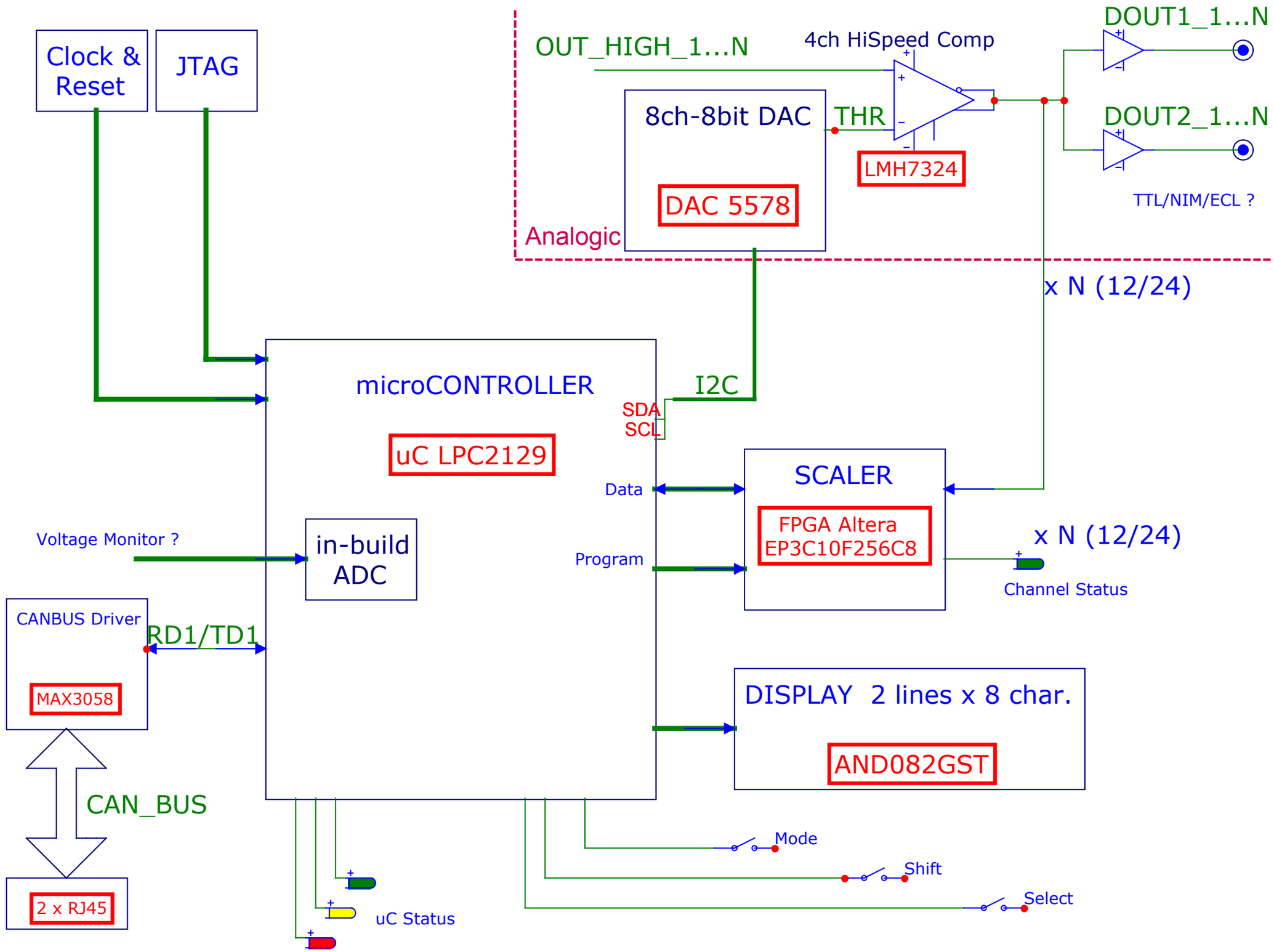

Finance and program

- In the context of **Borexino**, INFN has approved an upgrade of CTF electronics based on Flash ADCs
  - **160 kEuros** available

- This money is "sub-judice" (i.e. "under condition") to the presentation of a **detailed project and budgeting**
  - which means:
    - We need to define specs
    - We need to define the number of channels in Water (muon veto)
    - We need to define the number of channels in Scintillator (neutron veto)
    - We should decide who will pay Argon electronics
  - **all this work happening in the next months**

- **Argon** electronics not funded
  - In Genova we can provide front end for Argon in case we chose PMTs.
  - A different preamplifier is maybe needed for QPIDS
  - 12 bits, 2 GHz FADC perfect for QPIDs as well