17th Lomonosov Conference – ICAS

Moscow, Aug 19-26, 2015

The DarkSide-50 Experiment: a Liquid Argon Target for Dark Matter Particles

Nicola Rossi
on behalf of the DarkSide-50 Collaboration
LNGS (INFN), Italy

The DarkSide-50 Experiment

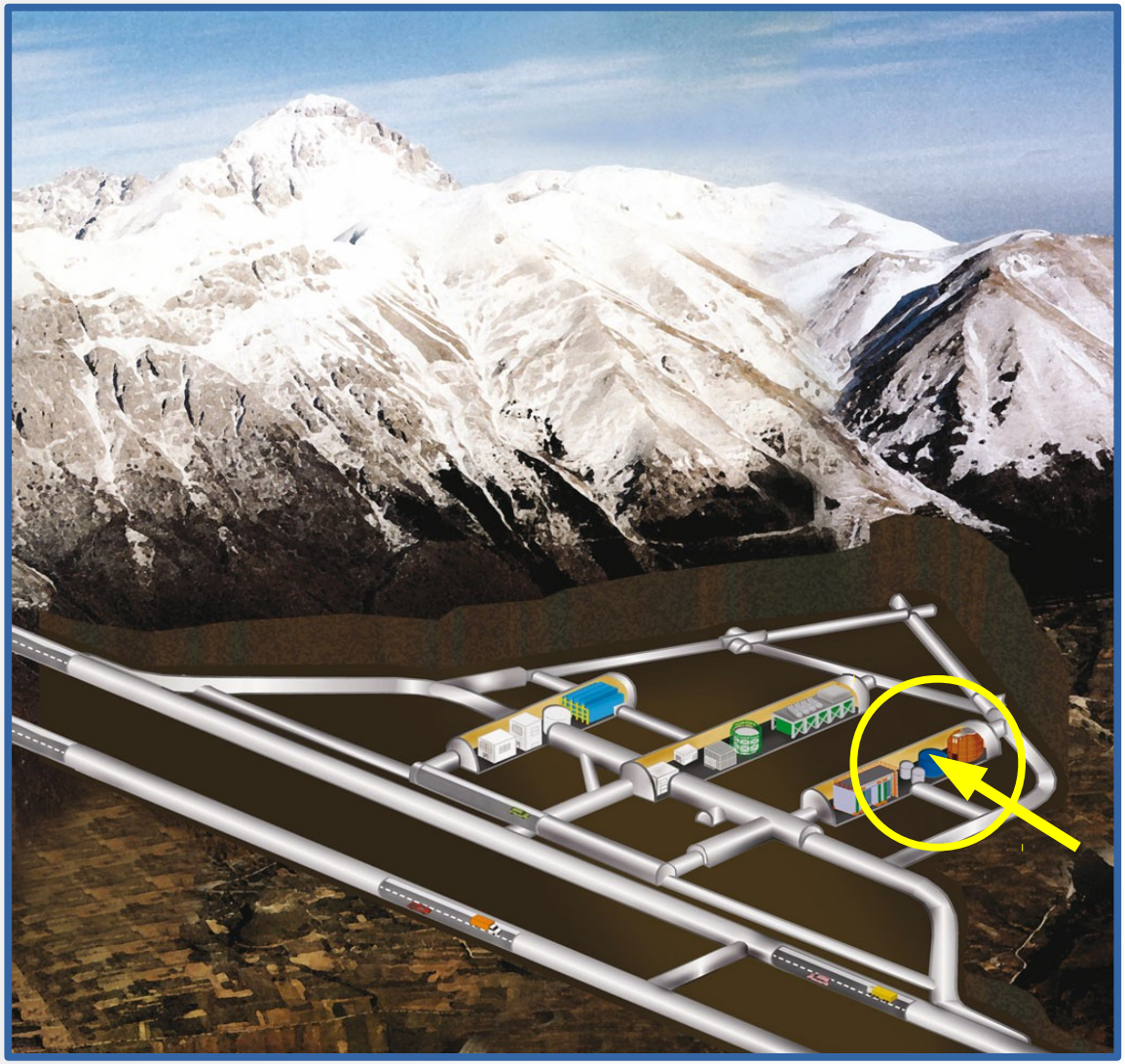

Laboratori Nazionali del Gran Sasso – INFN (Italy)
(**3800 w.e. depth**)

DarkSide-50

- in Hall C of the **Laboratori Nazionali del Gran Sasso (LNGS)**

- Dark Matter Particle search with double phase Ar **T**ime **P**rojection **C**hamber (**LAr-TPC**)

- Low background: **U**nderground (depleted) **Ar**gon **(UAr)** with reduced content of ^{39}Ar present in the **A**tmospheric **Ar (AAr)**

The DarkSide-50 Collaboration

(1) APC, Université Paris Diderot
(2) Physics and Astronomy Department, Augustana College
(3) Physics Department, Università degli Studi and INFN, Cagliari
(4) Kavli Institute, Enrico Fermi Institute and Dept. of Physics, University of Chicago
(5) School of Natural Sciences, Black Hills State University
(6) Joint Institute for Nuclear Research, Dubna
(7) Fermi National Accelerator Laboratory, Batavia
(8) Physics Department, Università degli Studi and INFN
(9) Gran Sasso Science Institute, L'Aquila
(10) Department of Physics and Astronomy, University of Hawaii
(11) Department of Physics, University of Houston
(12) Institute of High Energy Physics, Beijing
(13) Smoluchowski Institute of Physics, Jagiellonian University, Krakow
(14) Institute for Nuclear Research, National Academy of Sciences of Ukraine
(15) National Research Centre Kurchatov Institute
(16) Laboratori Nazionali del Gran Sasso
(17) National Research Nuclear University MEPhI
(18) Physics Department, Università degli Studi and INFN, Milano
(19) Skobeltsyn Institute of Nuclear Physics, Lomonosov Moscow State University
(20) Physics Department, Università degli Studi Federico II
(21) St. Petersburg Nuclear Physics Institute, Gatchina
(22) Chemistry, Biology and Biotechnology Department, Università degli Studi and INFN, Perugia
(23) Department of Physics, Princeton University, Princeton
(24) Physics Department, Università degli Studi Roma Tre
(25) SLAC National Accelerator Laboratory
(26) IPHC, Université de Strasbourg
(27) Physics Department, Temple University
(28) Physics Department, University of California
(29) Physics and Astronomy Department, University of California
(30) Amherst Center for Fundamental Interactions and Physics Department,
(31) Physics Department, Virginia Tech

The Dark Matter Search

If we believe that the fundamental physical laws (we deduced from our perspective) work for the the whole Universe, Dark Matter ~~must~~ should exist.

"*Indirect*" astrophysical observations:
- galaxy and cluster dynamics,
- Large Scale Structure,
- CMB fluctuations, …)

→ Dark Matter ~5 times more abundant than Baryonic (visible) matter

Stable, neutral, low interactive particles are expected in many extensions of the Standard Model

"*Direct*" interaction search:
- very low background (underground lab)
- high background rejection power
- energy threshold < 100 keV

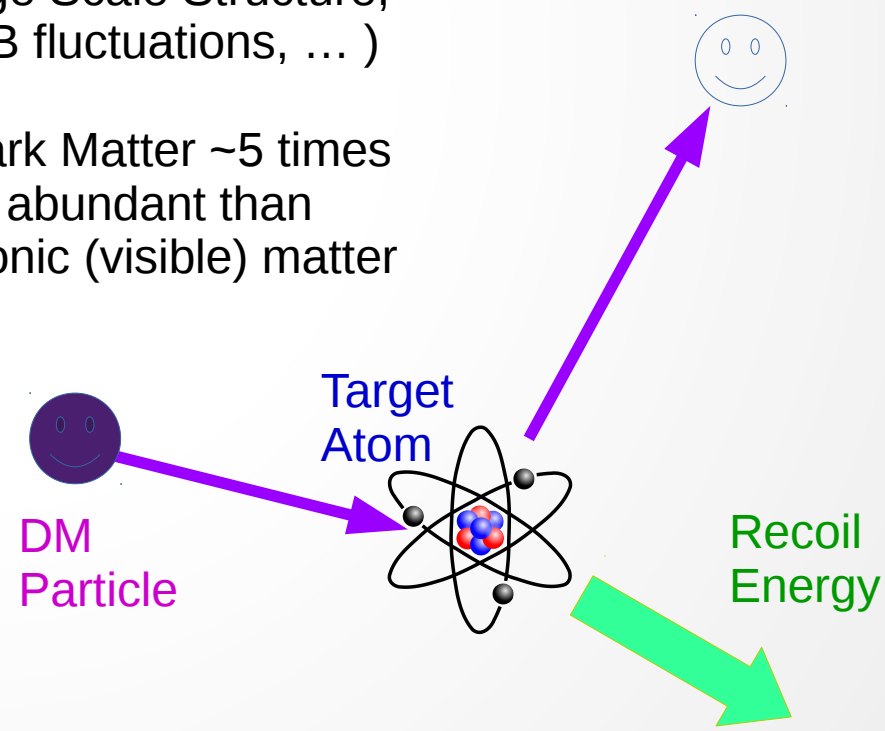

Spin-independent interaction (current scenario)

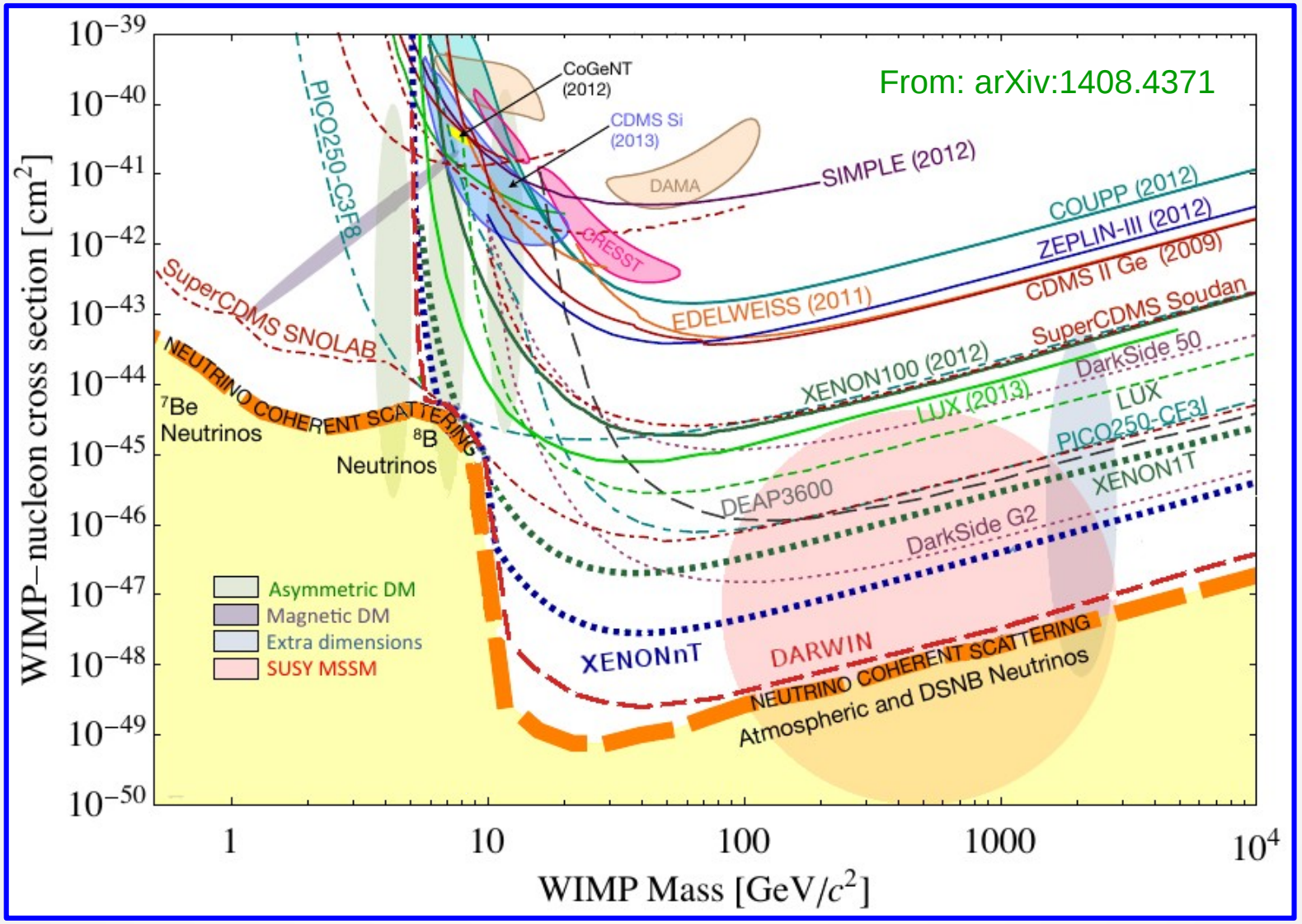

Why LAr TPC?

AAr:

- **Both scintillation and ionization:** S2/S1 electron recoil (ER) and nuclear recoil (NR) discrimination, position reconstruction (x, y, z), fiducialization, energy correction, multi-site event rejection
- **Abundant** (cheap, scalability to multi ton)
- Sufficient **self shielding** (A = 40)
- **Excellent e.m. background discrimination** (slow (6 ns) and fast component (1600 ns), even in single phase)
- **Established technique**
- **High Energy recoil** not strongly suppressed by form factor (Also with high threshold
- **High Light Yield** (LY): 40 PE/keV
- **Promising competitor** with the Xe for the multi-ton scale

UAr

- ^{39}Ar background reduced by a factor < 1/300
- Cheap if the production starts to be massive

The DarkSide-50 Concept

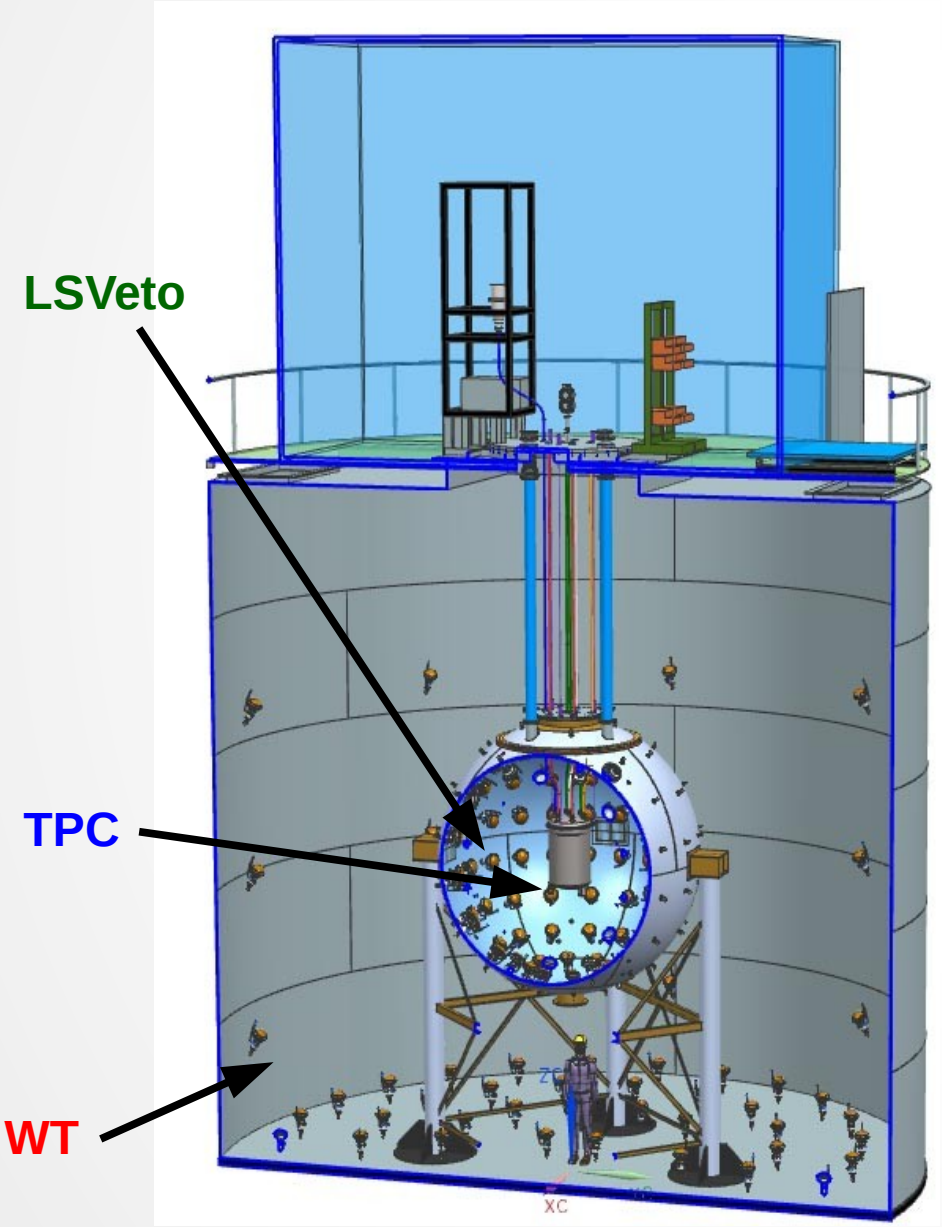

Three nested detectors:

TPC:
- 38 3” PMT (R11065) low radioactivity + Cold amplifiers
- Stainless steel cryostat, 150 Lt
- HHV: drift and extraction fields

LSVeto:
- Stainless sphere
- 1.5 m active shielding,
- 110 8” PMT
- Scintillator:
  30 ton TMB (5%) + PC
- 99.5 % efficiency

Water Tank:
- 1000t high purity water
- 80 8” PMT

Detector pics before the filling

The DS-50 timeline

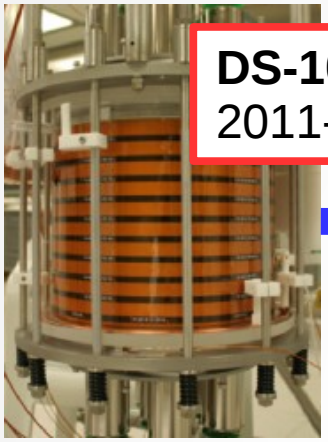

DS-10
2011-2012

DS-50 AAr
Autumn 2013
Winter 2015

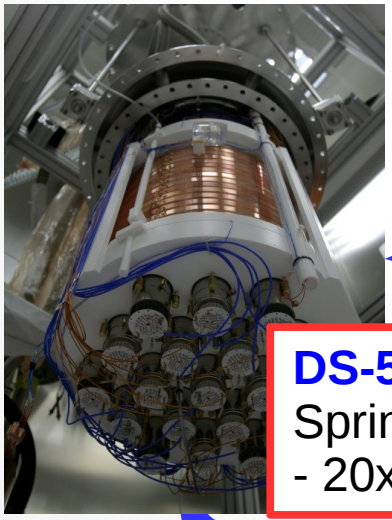

DS-50 UAr
Spring 2015 - 20xx

DS-20k (Multi-ton detector)
LOI in April 2015

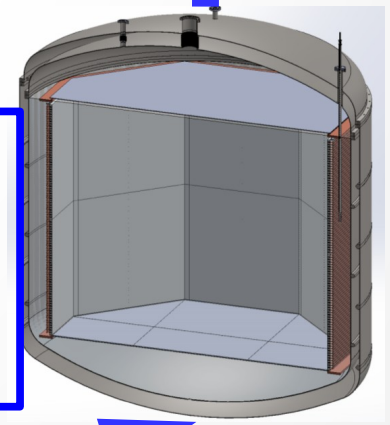

DS-Argo
The ultimate experiment in Dark Matter search
~100 ton
?

The 2-phase TPC

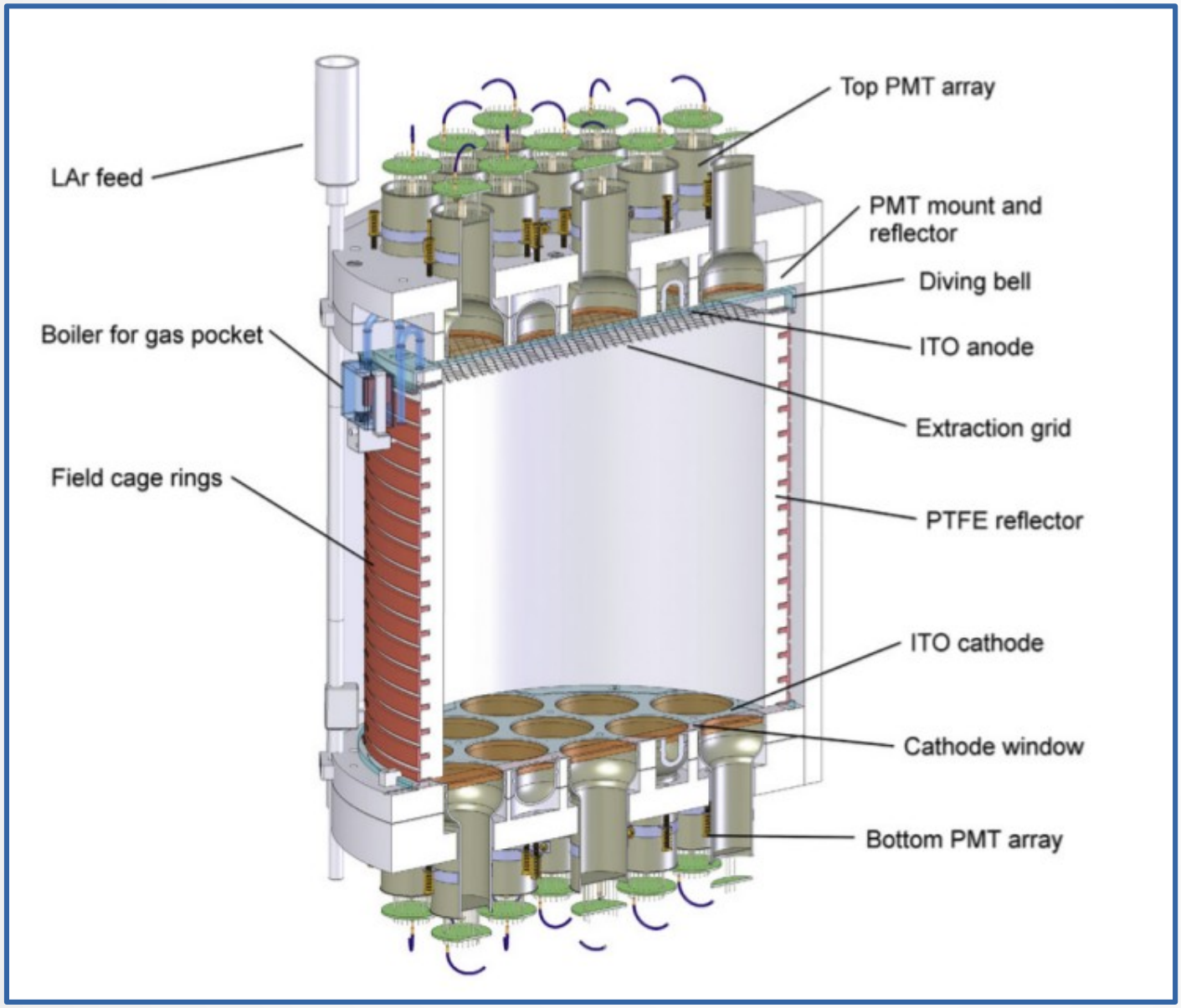

TPC scheme

TBP wavelength shifter on the walls

19 PMT on the **top** and 19 on the **bottom** with **cold amplifiers**

Drift Field:
0.2 kV/cm

Extraction Field:
2.8 kV/cm

The DarkSide-50 Signal

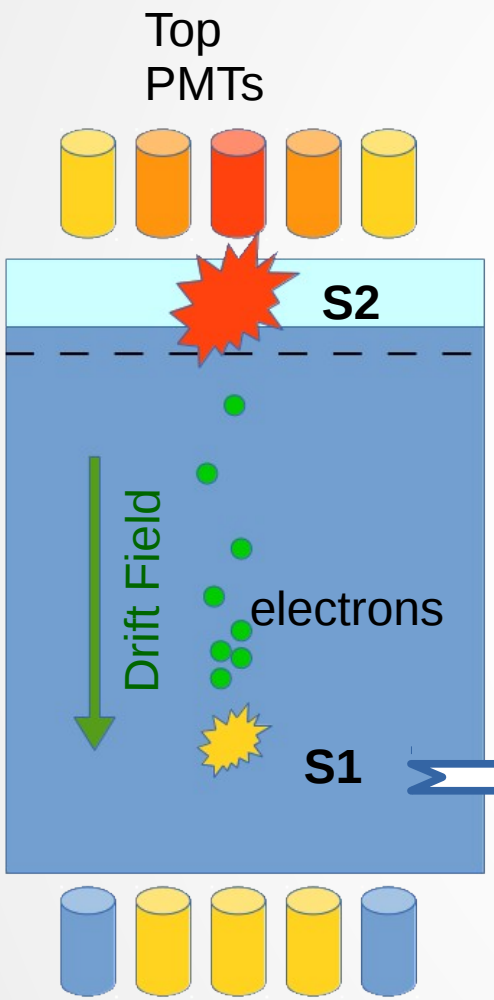

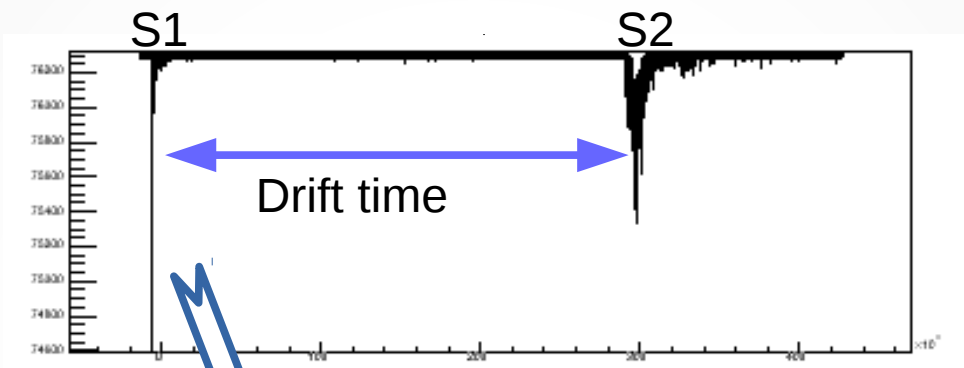

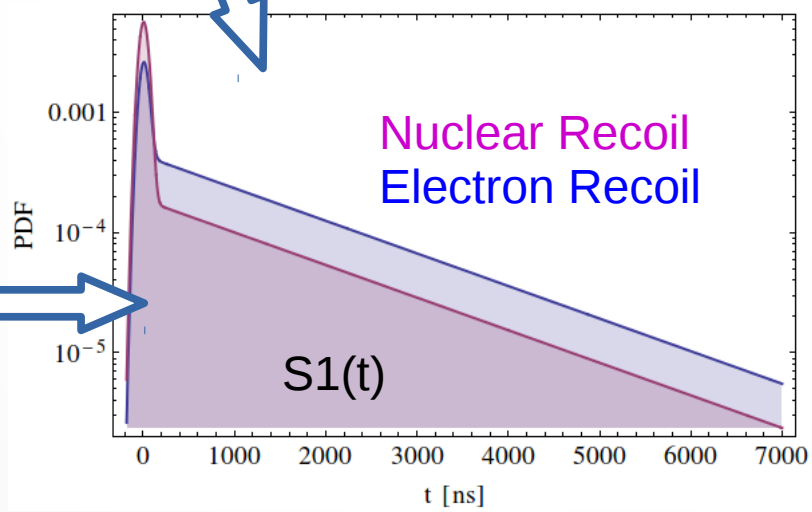

Z position through S1-S2 drift time

X, Y position through S2 light on top PMTs

- Discrimination through S1 pulse shape **(F90)**

- Discrimination through **S2/S1**

$$F90 = \frac{\int_0^{90\,ns} S1(t)dt}{S1}$$

Calibrations (TPC and LSVeto)

External AmBe (neutrons)

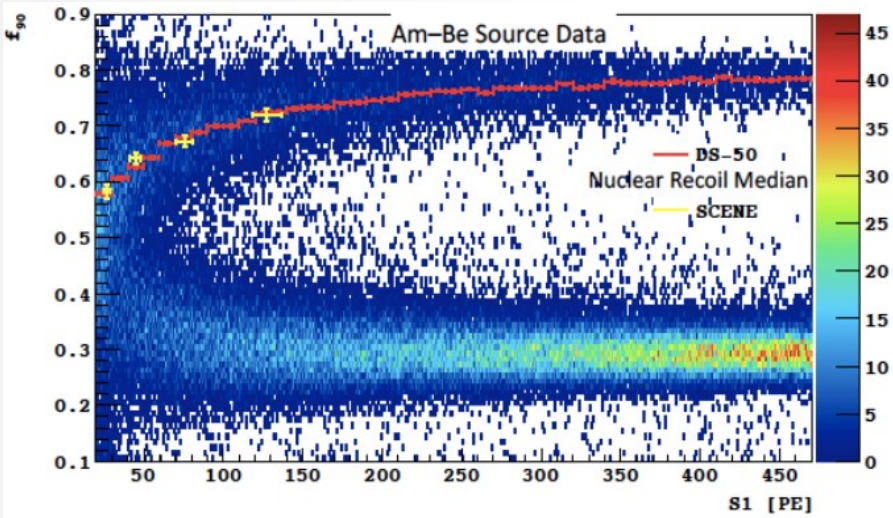

^{57}Co

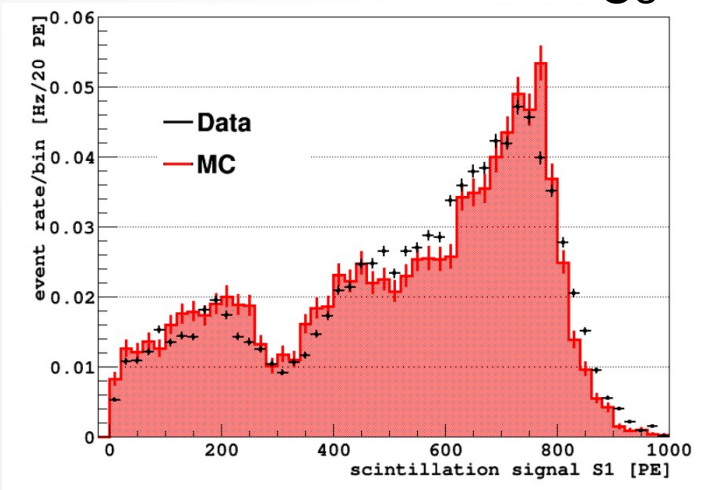

Internal

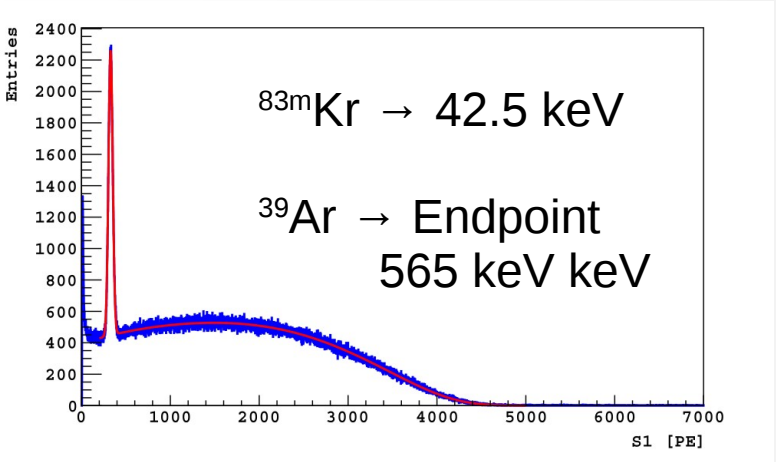

Calibration Insertion System (CALIS)

DarkSide-50 (AAr) first result

Exposure: 1422 Kg day AAr ~ 1 ton year of UAr
Rejection factor > $1:10^7$

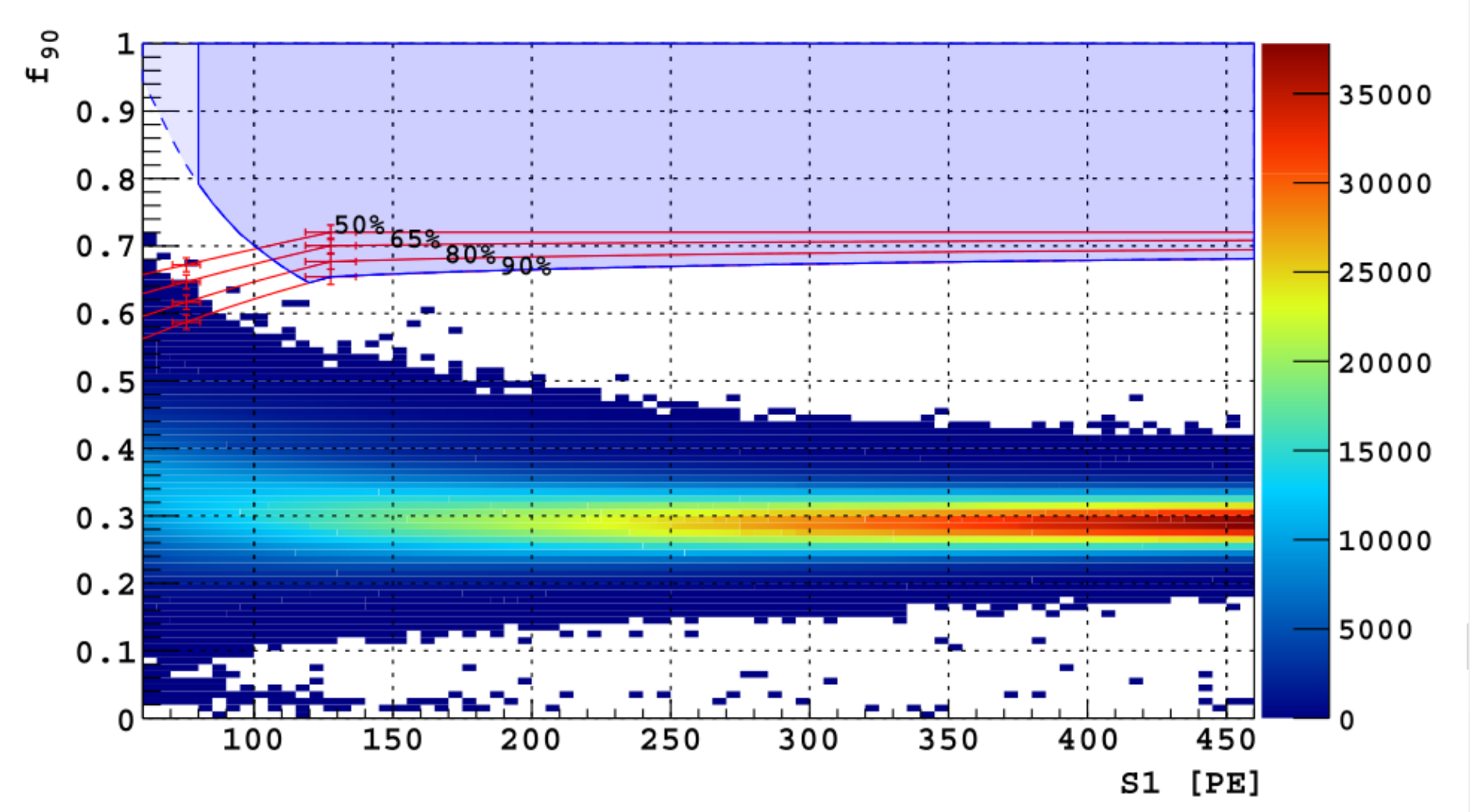

Phys.Lett. B743 (2015) 456-466

The best limit with Ar target

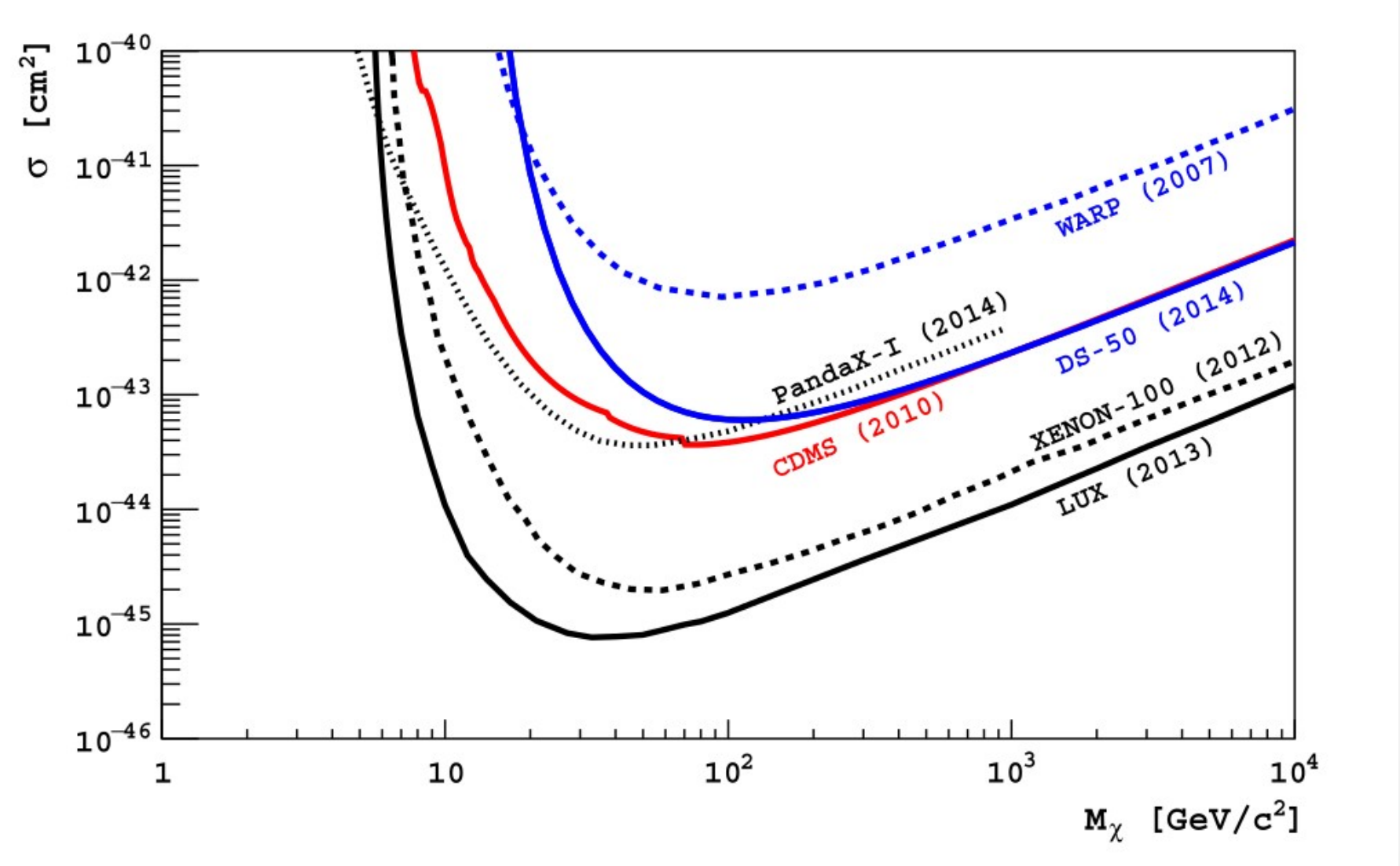

The 3rd best limit at large M_w

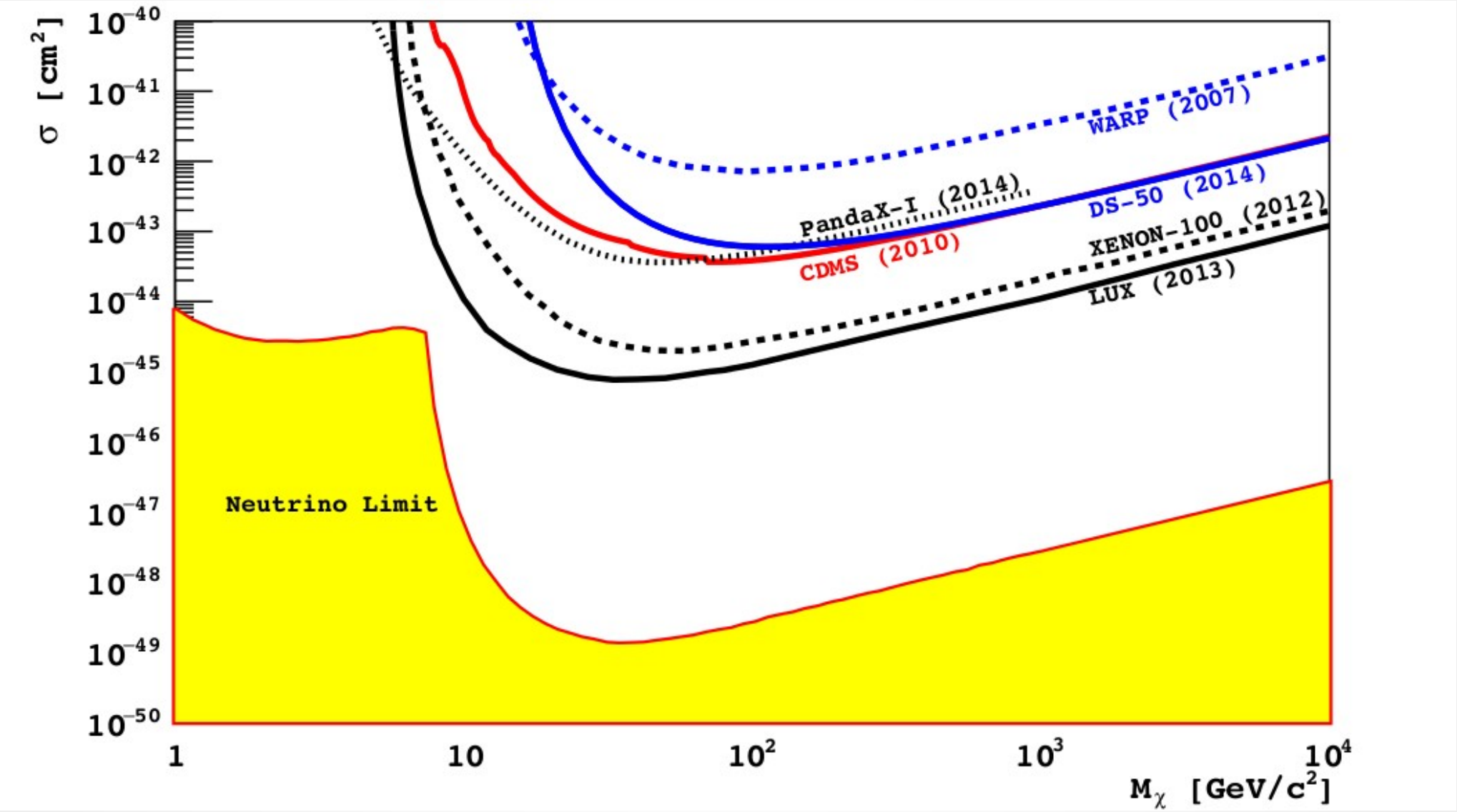

Underground Argon Campaign

Activity in AAr due to the presence of ^{39}Ar: 1 Bq/Kg (cosmogenic activation)

UAr activity measured less than a factor 300 with respect to AAr

→ **good for multi-ton scaling**

Underground Argon production:

- Extracted in Colorado
- Distilled in FermiLab
- Shipped to (LNGS 150)

UAr data taking

- April 2015

- 1.4 ton day already achieved

- Low ^{14}C TMB replacement in the LSVeto

- New calibrations

- road to $\sigma \sim 10^{-45}$ cm^2 sensitivity @ (1TeV)

First UAr background result

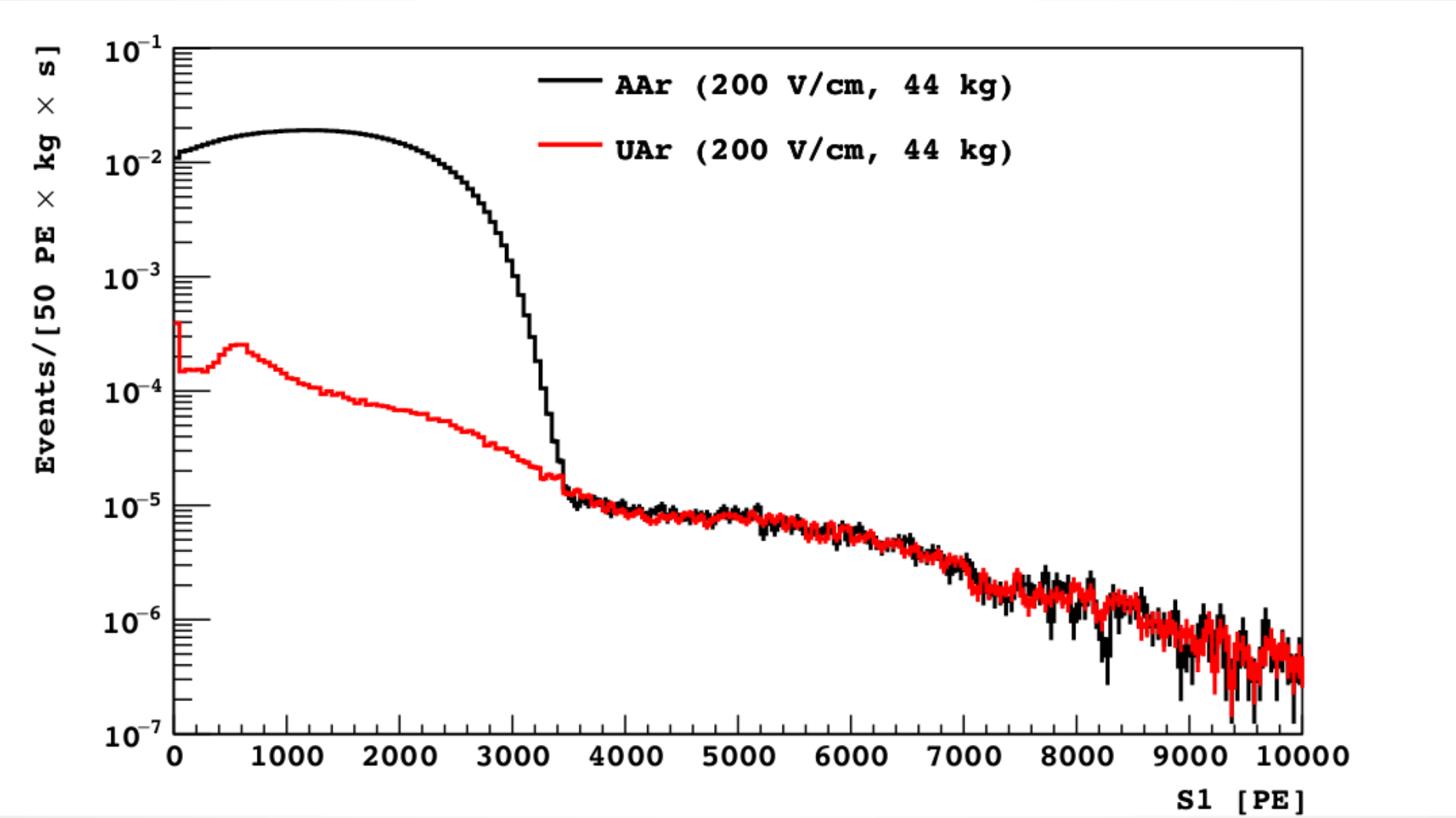

Inner core and LSV veto

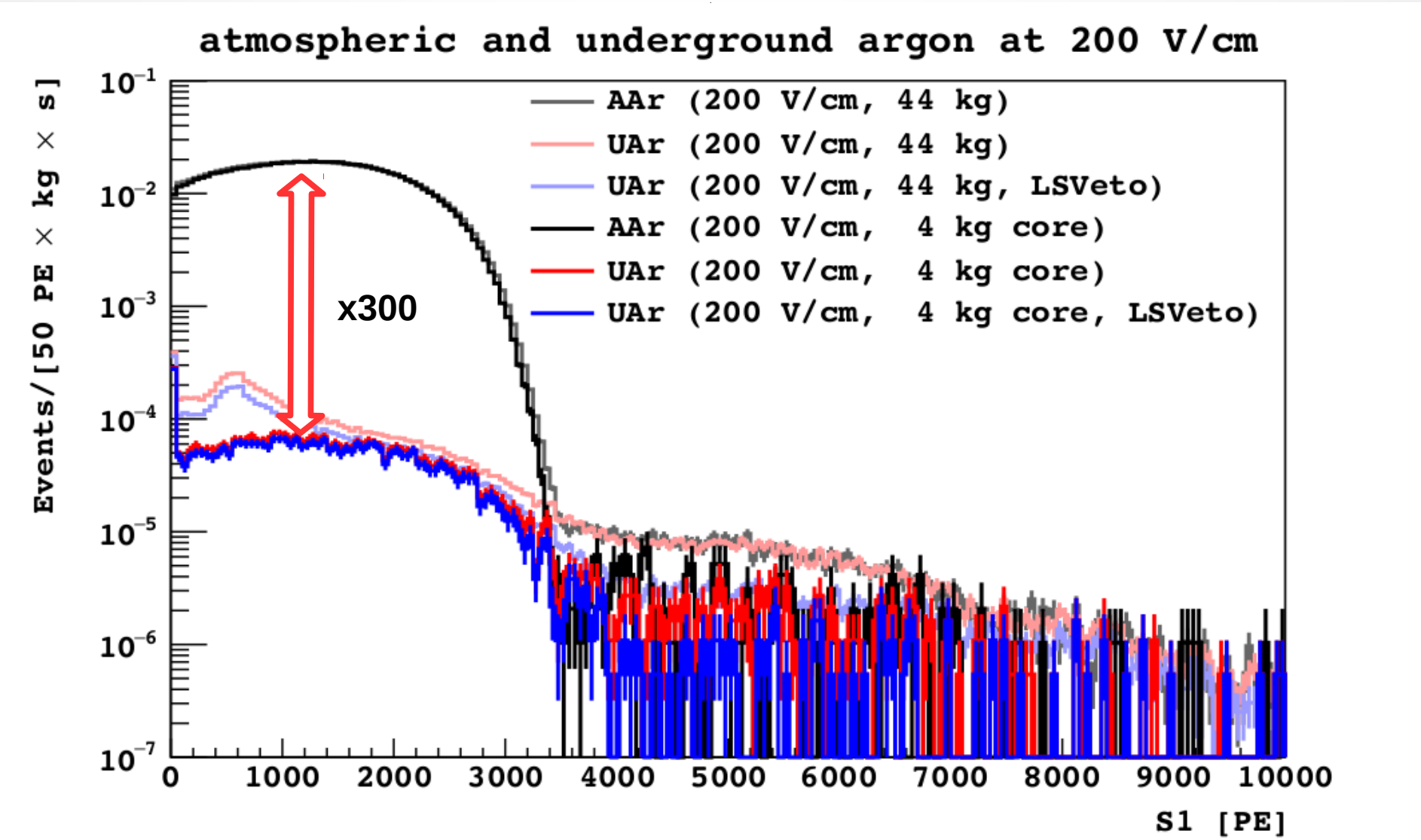

LAr future plans

DarkSide-50 Aar
1.4 ton day
$\sigma \sim 10^{-43}$ cm^2 (@M_w = 1 TeV)

DarkSide-50 UAr
~ 1 ton year
$\sigma \sim 10^{-46}$ cm^2 (th) (@M_w = 1 TeV)

DarkSide-20k
100 ton year
$\sigma \sim 9 \times 10^{-48}$ cm^2 (@M_w = 1 TeV)
Intermediate stage

Future:
Argo (300 ton)
(The ultimate experiment in Dark matter search

~ 1000 ton year
$\sigma \sim 9 \times 10^{-49}$ cm^2 (@M_w = 1 TeV)

DarkSide-20k LOI (2015)

D. Franco, A Tonazzo - APC Paris
D. Alton - Augustana College
A. Kubankin - Belgorod National Research University
K. Keeter, B. Mount - Black Hills State University
L. Romero, R. Santorelli - CIEMAT
S. Horikawa, K. Nikolics, C. Regenfus, A. Rubbia - ETH Zürich
S. Pordes - Fermilab
A. Gola, C. Piemonte - FBK & TIFPA
S. Davini - GSSI
E. Hungerford, A. Renshaw - University of Houston
M. Guan, J. Liu, Y. Ma, C. Yang, W. Zhong - IHEP Beijing
N. Canci, F. Gabriele, G. Bonfini, A. Razeto, N. Rossi, F. Villante - LNGS
C. Jollet, A. Meregaglia - IPHC Strasbourg
M. Misziazek, M. Woicik, G. Zuzel - Jagiellonian University
K. Fomenko, A. Sotnikov, O. Smirnov - JINR
M. Skorokhvatov - Kurchatov Institute Moscow
A. Derbin, V. Muratova, D. Semenov, E. Unzhakov - PNPI Saint Peterburg
S. De Cecco, C. Giganti - LPNHE Paris
H. O. Back - PNNL
M. Ghioni, A. Gulinatti, L. Pellegrini, I. Rech, A. Tosi, F. Zappa - Politecnico di Milano
C. Galbiati, A. Goretti, A. Ianni, P. Meyers, M. Wada - Princeton University
A. Chepurnov, G. Girenok, I. Gribov, M. Gromov, I. Zilcov - SINP MSU Moscow
C.J. Martoff, J. Napolitano, J. Wilhelmi - Temple University
E. Pantic - UCDavis
Y. Suvorov, H. Wang - UCLA
A. Pocar - UMass Amherst
A. Machado, E. Segreto - Campinas
A. Devoto, M. Lissia, M. Mascia, S. Palmas - Università & INFN Cagliari
M. Pallavicini, G. Testera, S. Zavatarelli - Università & INFN Genova
D. D'Angelo, G. Ranucci - Università & INFN Milano
F. Ortica, A. Romani - Università & INFN Perugia
S. Catalanotti, A. Cocco, G. Covone, G. Fiorillo, B. Rossi - Università Federico II & INFN Napoli
C. Dionisi, S. Giagu, M. Rescigno - Università La Sapienza & INFN Roma
S. Bussino, S. Mari - Università & INFN Roma 3
J. Maricic, R. Milincic, B. Reinhold - University of Hawaii
P. Cavalcante - Virginia Tech

DarkSide-20k

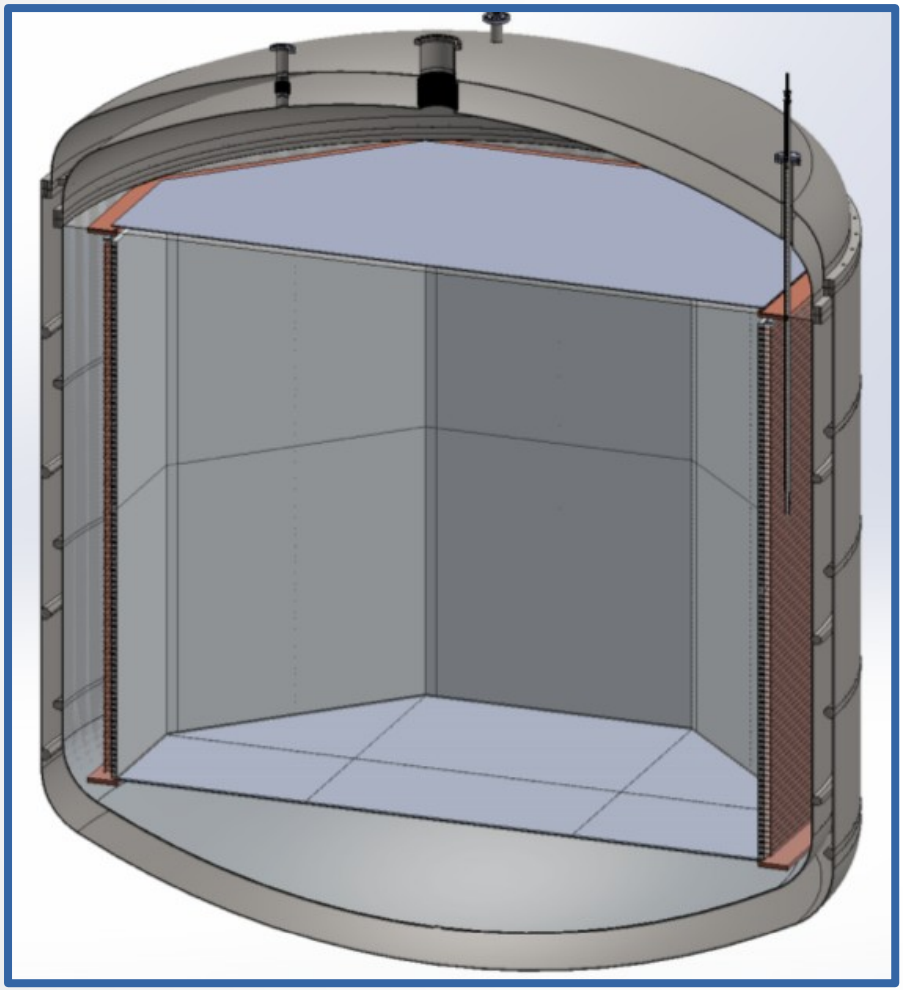

Main Features

- SiPM (FBK): **LY** increased 15-50% (preliminary tests look promising)
- **30 ton** LAr (20 ton Fiducial Volume)
- No LSVeto
- Titanium from Russia (low radioactivity)

"Urania" project:

- **expansion** of Colorado UAr extraction facility to reach 100 kg/day

"Aria" project:

-Big cryogenic **distillation column** in Seruci, Sardinia (~300 mt high, 1000 stages)
- Gas purification AND **active isotopic depletion** exploiting finite vapor pressure difference $^{39}Ar/^{40}Ar$ (99% efficiency →~10 μBq/Kg)

Conclusions

- Ar technology shows **good performances for Dark Matter search**, especially thanks to the high rejection power
- DarkSide-50 AAr &UAr is demonstrating the **feasibility** of the detection based on LAr
- LAr **detectors can be scaled to multi-ton** and are the most powerful background-free technique for the **ultimate experiment in Dark Matter search** (neutrino floor)

Thank you for your attention!